WORCESTER COUNTY DEPARTMENT OF PUBLIC WORKS

LEWIS ROAD GRAVITY SEWER SYSTEM AND PUMP STATION

PREPARED FOR: WORCESTER COUNTY, MARYLAND

LOCATION MAP
SCALE: 1" = 7.5 MI

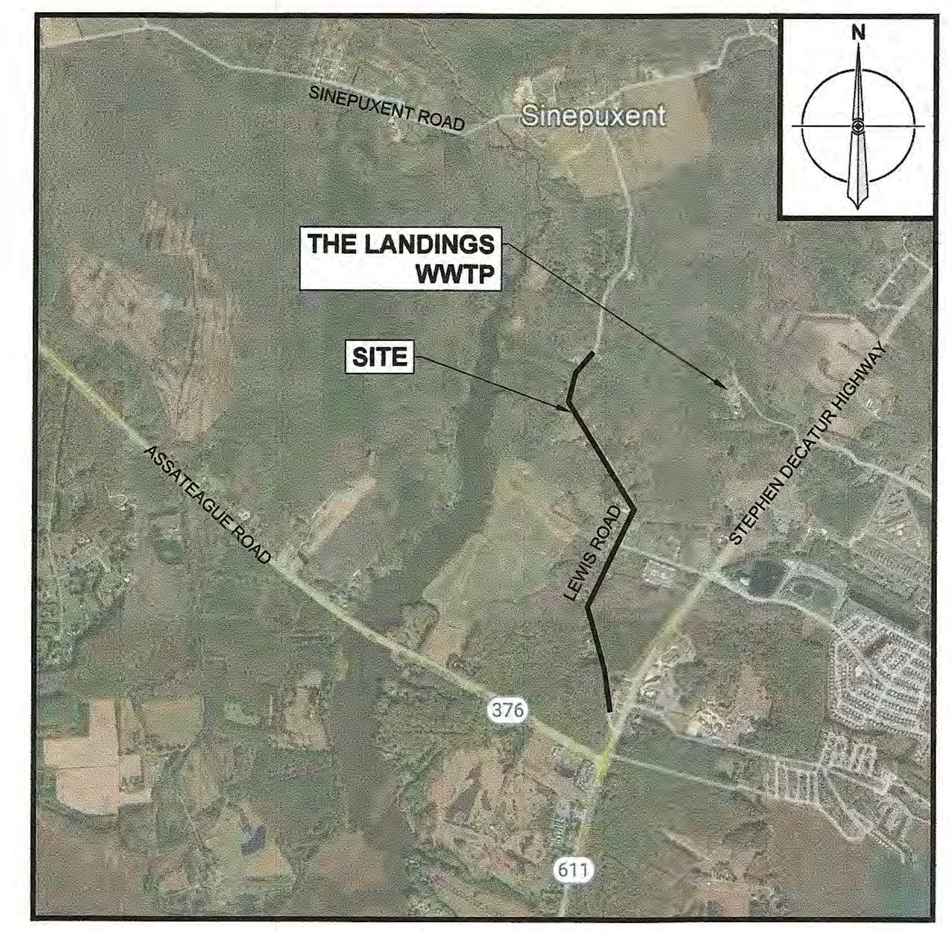

VICINITY MAP
SCALE: 1" = 2,000'

GENERAL NOTES:

1. LOCATIONS OF THE EXISTING UNDERGROUND SEWER AND WATER UTILITIES SHOWN ON SITE PLANS ARE TAKEN FROM WORCESTER COUNTY'S GEOGRAPHICAL INFORMATION SYSTEM.
2. UTILITY INFORMATION IS FOR THE CONVENIENCE OF THE CONTRACTOR ONLY. THE CONTRACTOR SHALL LOCATE AND TAKE THE NECESSARY PRECAUTIONS TO LOCATED AND PROTECT THE EXISTING UTILITIES. CONTRACTOR SHALL NOTIFY "MISS UTILITY" AT LEAST THREE DAYS BEFORE INITIATING ANY SITE IMPROVEMENT WORK, (1-800-257-7777).
3. LOCATION AND TOPOGRAPHIC SURVEY OF LEWIS ROAD AS DELINEATED ON THE PLANS WAS COMPLETED BY RUSSELL T. HAMMOND SURVEYING LLC. IN APRIL OF 2022. SURVEY WAS PERFORMED WITHIN MARYLAND STATE PLANE COORDINATE SYSTEM: HORIZONTAL DATUM NAD83, VERTICAL DATTUM NAVD88.
4. WETLANDS SHOWN ON THE PLANS ARE A COMPOSITE OF A FIELD INVESTIGATION PERFORMED BY EA ENGINEERING, SCIENCE, AND TECHNOLOGY, INC. PBC ON JUNE 2022 AND EXISTING MAPPED WETLAND AREAS SHOWN WITHIN MARYLAND DEPARTMENT OF NATURAL RESOURCES INTERACTIVE GIS MAPPING "MERLIN."
5. PROPERTY LINES SHOWN WERE OBTAINED FROM WORCESTER COUNTY'S GEOGRAPHICAL INFORMATION SYSTEM.
6. DELINEATED SOILS SHOWN ARE DIGITIZED FROM THE UNITED STATES DEPARTMENT OF AGRICULTURE NATURAL RESOURCES CONSERVATION SERVICES "WEB SOIL SURVEY" ONLINE APPLICATION.
7. CONTRACTOR SHALL BE SOLELY RESPONSIBLE FOR THE MEANS, METHODS, TECHNIQUES, AND PROCEDURES, UTILIZED FOR THE CONSTRUCTION UNDER THE SCOPE OF WORK. CONTRACTOR SHALL BE RESPONSIBLE FOR SAFETY OF THE PUBLIC AND CONTRACTOR'S EMPLOYEES. THE CONTRACTOR SHALL BE SOLELY RESPONSIBLE TO CARRY OUT THE WORK IN ACCORDANCE WITH THE CONTRACT DOCUMENTS AND STANDARD CONSTRUCTION PRACTICES.
8. FAILURE TO MENTION SPECIFICALLY ANY WORK WHICH WOULD NORMALLY BE REQUIRED TO COMPLETE THIS PROJECT SHALL NOT RELIEVE THE CONTRACTOR FROM PERFORMING SUCH WORK.
9. ALL WORK ON THIS PROJECT SHALL BE PERFORMED IN ACCORDANCE WITH THE REQUIREMENTS SET FORTH BY WORCESTER COUNTY STANDARDS. IT IS THE CONTRACTOR'S RESPONSIBILITY TO OBTAIN AND BE FAMILIAR WITH THE STANDARDS.
10. ALL DIMENSIONS, LOCATIONS, AND ELEVATIONS OF EXISTING STRUCTURES SHOWN ON THE CONTRACT DRAWINGS SHALL BE VERIFIED IN THE FIELD BY THE CONTRACTOR. ALL DISCREPANCIES SHALL BE BROUGHT TO THE ATTENTION OF THE ENGINEER BEFORE PROCEEDING WITH WORK.
11. ALL ASPECTS OF CONSTRUCTION AND EQUIPMENT INSTALLATION SHALL BE PERFORMED / INSTALLED PLUM AND TRUE AND SHALL CONFORM TO THE PRACTICES OF GOOD WORKMANSHIP.
12. MATERIAL DEMOLISHED/SALVAGED DURING CONSTRUCTION SHALL BECOME THE CONTRACTOR'S PROPERTY UNLESS OTHERWISE NOTED ON THE PLANS AND SPECIFICATIONS.
13. THE CONTRACTOR SHALL TAKE NECESSARY PRECAUTIONS CONCERNING SAFETY AND PRESERVATION OF EXISTING UTILITIES ADJACENT TO ANY WORK AND IS RESPONSIBLE FOR THE PROTECTION OF EXISTING STRUCTURES (BELOW GRADE AND ABOVE GRADE) DURING THE COURSE OF DEMOLITION AND CONSTRUCTION. ANY DAMAGE CAUSED BY THE CONTRACTOR SHALL BE REPAIRED IMMEDIATELY AND THE COSTS OF SUCH REPAIR SHALL BE BORNE BY THE CONTRACTOR.
14. CONTRACTOR SHALL TAKE EVERY MEASURE TO PREVENT ANY AND ALL DAMAGE TO NEIGHBORING PROPERTIES. CONTRACTOR IS RESPONSIBLE FOR ANY AND ALL SUCH DAMAGE AND WILL REPAIR AND / OR REPLACE ANY OBJECT, PLANT OR PIECE OF PROPERTY TO ORIGINAL STATE ON ADJACENT PROPERTIES THAT IS DAMAGED IN ANY WAY DUE TO THIS CONSTRUCTION.
15. ALL WORK SHALL BE COORDINATED WITH WORCESTER COUNTY DEPARTMENT OF PUBLIC WORKS. CONTRACTOR SHALL PROVIDE FOR AND MAINTAIN TRAFFIC ACCESS TO PROPERTY OWNERS ALONG LEWIS ROAD AT ALL TIMES. A TRAFFIC CONTROL PLAN IN ACCORDANCE WITH MARYLAND DEPARTMENT OF TRANSPORTATION STATE HIGHWAY ADMINISTRATION (MDOT SHA) STANDARDS MUST BE SUBMITTED FOR APPROVAL.
16. THE CONTRACTOR IS RESPONSIBLE FOR KEEPING THE CONSTRUCTION SITE SECURE AT ALL TIMES.
17. JOB SITE SAFETY SHALL BE SOLELY THE RESPONSIBILITY OF THE CONTRACTOR.
18. CONTRACTOR IS RESPONSIBLE FOR PERFORMING ALL WORK IN ACCORDANCE WITH STATE AND FEDERAL CONFINED SPACE SAFETY REGULATIONS AS REQUIRED.
19. CONTRACTOR SHALL BE RESPONSIBLE FOR RESTORATION OF SURFACES IN ALL DISTURBED AREAS.
20. ANY AND ALL IMPROVEMENTS, SUCH AS ASPHALT OR CONCRETE PAVEMENT, SOD, ETC., IF DAMAGED, SHALL BE RESTORED TO ITS ORIGINAL CONDITION BY THE CONTRACTOR.
21. THE CONTRACTOR SHALL EXECUTE DEMOLITION AND DISMANTLING WORK IN A MANNER TO ENSURE SAFETY OF PERSONS AND ADJACENT PROPERTY AGAINST DAMAGE BY SETTLEMENT, FALLING DEBRIS, OR OTHER CAUSES IN CONNECTION WITH THIS WORK.
22. THE CONTRACTOR SHALL FIELD VERIFY ALL DIMENSIONS AND ELEVATIONS PRIOR TO PROCEEDING WITH CONSTRUCTION.
23. THE CONTRACTOR SHALL PROVIDE SURVEY CONSTRUCTION STAKEOUT FOR ALL NECESSARY LINE, GRADES, AND ELEVATIONS OF THE PROPOSED FACILITIES.
24. THE CONTRACTOR SHALL MAINTAIN AN "AS-BUILT" DRAWING RECORD OF THE PROPOSED CONSTRUCTION. THE CONTRACTOR SHALL RECORD ALL DEVIATIONS FROM THE CONTRACT DOCUMENTS AS THEY OCCUR, TO CLEARLY DEPICT HOW WORK WAS ACTUALLY CONSTRUCTED. PARTICULAR ATTENTION SHALL BE GIVEN TO ACCURATE RECORDINGS OF CONCEALED WORK. THE "AS-BUILT" RECORD SHALL INCLUDE DESCRIPTIONS, DRAWINGS, SKETCHES, MARKED PRINTS, AND SIMILAR DATA SHALL BE MAINTAINED AT THE JOB SITE AND SHALL BE KEPT CURRENT ON A DAILY BASIS AS WORK PROGRESSES. ALL "AS-BUILT" DRAWINGS AND RELATED DATA SHALL BE SUBJECT TO REGULAR SURVEILLANCE BY THE OWNER'S ON-SITE REPRESENTATIVE.
25. THE CONTRACTOR IS RESPONSIBLE FOR TEST PITTING FOR ALL UTILITIES WITHIN THE PROJECT LIMITS.
26. THE CONTRACTOR SHALL MAINTAIN A 10 FOOT HORIZONTAL AND 18 INCH VERTICAL SEPARATION BETWEEN ALL SANITARY MAINS, WATER MAINS, AND SERVICE LATERALS.
27. THE CONTRACTOR SHOULD MAINTAIN 2 FOOT HORIZONTAL AND 12 INCH VERTICAL SEPARATION BETWEEN THE PROPOSED SANITARY FORCEMAIN AND PROPOSED SANITARY MAINS/LATERALS.
28. THE CONTRACTOR IS RESPONSIBLE FOR OBTAINING A WATER APPROPRIATION PERMIT FOR THE DEWATERING OF THE PROJECT AREA.
29. THE CONTRACTOR IS RESPONSIBLE FOR SECURING A SITE FOR MATERIAL STAGING AND STOCKPILING.

FILE PATH: \\OCEANPINES\PROJECTS\DOCS\WORCESTER COUNTY\6250909 - LEWIS ROAD SEWER CONNECTION\CAD\PRODUCTION\DESIGN SET\G-001 TITLE SHEET.DWG [G-001] LEMASTERS, STEVEN 9/5/2023 5:06 PM

SHEET LIST

DRAWING NO.	SHEET NO.	DRAWING TITLE
G-001	1	TITLE SHEET
C-101	2	OVERALL EXISTING CONDITIONS AND KEY SHEET
C-201	3	GRAVITY SEWER PLAN AND PROFILE I
C-202	4	GRAVITY SEWER PLAN AND PROFILE II
C-203	5	GRAVITY SEWER PLAN AND PROFILE III
C-204	6	GRAVITY SEWER PLAN AND PROFILE IV
C-205	7	GRAVITY SEWER PLAN AND PROFILE V
C-206	8	GRAVITY SEWER PLAN AND PROFILE VI
C-207	9	GRAVITY SEWER PLAN AND PROFILE VII
C-208	10	LEWIS ROAD FORCEMAIN PLAN AND PROFILE
C-209	11	WHITETAIL LANE FORCEMAIN PLAN AND PROFILE
C-301	12	EROSION & SEDIMENT CONTROL AND PUMP STATION SITE PLAN
C-302	13	PUMP STATION SECTIONS AND DETAILS
C-501	14	DETAIL SHEET I
C-502	15	DETAIL SHEET II
C-503	16	DETAIL SHEET III
C-701	17	EROSION & SEDIMENT CONTROL NOTES
C-702	18	EROSION & SEDIMENT CONTROL DETAILS
E-101	19	ONE-LINE DIAGRAM AND ABBREVIATION
E-102	20	ELECTRICAL SITE PLAN AND NOTES
E-401	21	PUMP CONTROL PANEL AND EQUIPMENT MOUNTING RACK
E-501	22	PUMP CONTROL PANEL ELEMENTARY

Sediment Control Plan Approval
Worcester Soil Conservation District
Snow Hill, MD 21863

Approved by [signature]
Date 9/6/23

S.W.M. Plan Approval
Worcester County Environmental Programs
Snow Hill MD 21863
Approved by [signature]
Date 9/13/23
THIS APPROVAL EXPIRES IN TWO (2) YEARS.
BOND P O

SUMMARY OF WORK

THIS PROJECT SCOPE GENERALLY ENTAILS:

1. OBTAINING PERMITS TO CONSTRUCT THE PROJECT, INCLUDING GROUNDWATER APPROPRIATION PERMIT.
2. INSTALLATION OF GRAVITY SEWER SYSTEM INCLUDING, BUT NOT LIMITED TO, MANHOLES, PVC GRAVITY PIPING SYSTEM, CONNECTION TO PUMP STATION WET WELL, AND SERVICE LATERALS TO THE PROPERTY LINE.
3. INSTALLATION OF REGIONAL PUMP STATION INCLUDING, BUT NOT LIMITED TO, PRECAST CONCRETE WET WELL, SUBMERSIBLE PUMPS AND APPURTENANCES, PRECAST CONCRETE VALVE VAULT, AND FLOW METER.
4. INSTALLATION OF PRESSURE SEWER FORCEMAIN TRANSMISSION FROM THE PUMP STATION TO THE EXISTING TERMINUS FROM THE LANDINGS WASTEWATER TREATMENT PLANT.
5. INSTALLATION OF LOW PRESSURE SEWER FORCEMAIN ALONG WHITETAIL DRIVE DISCHARGING TO GRAVITY SEWER SYSTEM.
6. OBTAINMENT OF ELECTRICAL SERVICE AND CONNECTION TO THE PUMP STATION CONTROL PANELBOARD.
7. ELECTRICAL DISTRIBUTION, CONTROLS, PANELS, CONNECTION TO THE PUMP STATION, AND EMERGENCY GENERATOR.
8. COMMISSIONING OF THE SYSTEM.
9. INSTALLATION AND MAINTENANCE OF EROSION AND SEDIMENT CONTROL DEVICES
10. CLEARING THE PUMP STATION SITE TO LIMITS SHOWN.
11. INSTALLATION OF STORMWATER MANAGEMENT RAIN GARDEN FACILITY
12. INSTALLATION OF PUMP STATION PERIMETER FENCING.
13. PROVIDING MAINTENANCE OF TRAFFIC.
14. PERFORMING ABANDONMENT OF PRIVATE SEPTIC TANKS AND SEPTIC FIELDS.

THE WATER AND SEWER FACILITIES TO BE CONSTRUCTED IN ACCORDANCE WITH THESE PLANS ARE APPROVED BY THE WORCESTER COUNTY WATER AND WASTEWATER DIVISION.

WORCESTER COUNTY, WATER AND WASTEWATER DIVISION — DATE

THE WATER AND SEWER FACILITIES TO BE CONSTRUCTED IN ACCORDANCE WITH THESE PLANS ARE APPROVED BY THE WORCESTER COUNTY DEPARTMENT OF PUBLIC WORKS.

[signature] 9/6/23
WORCESTER COUNTY, DIRECTOR OF PUBLIC WORKS — DATE

CERTIFICATE OF COMPLIANCE

I HEREBY CERTIFY THAT I HAVE INSPECTED THIS SITE AND THAT DRAINAGE ONTO THIS SITE FROM OTHER UPGRADE PROPERTIES, AND FROM THIS SITE ONTO OTHER DOWNGRADE PROPERTIES HAS BEEN ADDRESSED IN SUBSTANTIAL ACCORDANCE WITH APPLICABLE CODES

[signature] 9/5/23
STEVEN LEMASTERS, P.E. — DATE
MD P.E. NO. 55422

PROJECT AND SITE DATA

1. OWNER: COUNTY COMMISSIONERS OF WORCESTER COUNTY MARYLAND
 1 WEST MARKET STREET, ROOM 1103
 SNOW HILL, MARYLAND 21863
 CONTACT: MR. DALLAS BAKER
 EMAIL: DBAKER@CO.WORCESTER.MD.US
 PHONE: 410-632-5623
2. APPLICANT: WORCESTER COUNTY DEPARTMENT OF PUBLIC WORKS
 6113 TIMMONS ROAD,
 SNOW HILL, MARYLAND 21863
 CONTACT: MR. DALLAS BAKER, P.E.
 EMAIL: DBAKER@CO.WORCESTER.MD.US
 PHONE: 410-632-5623
3. SURVEYOR: RUSSELL T. HAMMOND SURVEYING, LLC
 10310 HOTEL ROAD
 BISHOPVILLE, MARYLAND 21813
 CONTACT: MR. RUSSELL HAMMOND
 EMAIL: RUSSELL@RTHSURVEYING.COM
 PHONE: 410-352-5674
4. ENGINEER: EA ENGINEERING, SCIENCE, AND TECHNOLOGY, INC. PBC
 11200 RACETRACK ROAD, UNIT 101A
 OCEAN PINES, MARYLAND 21811
 CONTACT: STEVEN LEMASTERS, P.E.
 EMAIL: SLEMASTERS@EAEST.COM
 PHONE: 410-641-5341
5. SITE ADDRESS: UNASSIGNED PHYSICAL ADDRESS
6. PROPERTY: PUMP STATION: PART OF TAX MAP 33, GRID 10, PARCEL: 318
 DEEF REFERENCE: 7114/479
 TOTAL PARCEL AREA = 10.08 AC.
 UTILITY PARCEL AREA = 0.129 AC.
7. ZONING: A-2: AGRICULTURAL DISTRICT
8. EXISTING USE: UTILITY: PUBLIC RIGHT OF WAY
 PUMP STATION: WOODED VACANT LAND
9. FLOODPLAIN: THE PUMP STATION SITE IS WITHIN ZONE X - SHADED, AREAS OF 0.2% ANNUAL CHANCE FLOOD, AREA OF 1% ANNUAL CHANCE FLOOD WITH AVERAGE DEPTH OF LESS THAN 1 FOOT OR WITH DRAINAGE AREAS LESS THAN 1 SQUARE MILE, AND AREAS PROTECTED BY LEVEES FROM 1% ANNUAL CHANCE FLOOD PER FIRM PANEL 24047C0170H, LAST REVISED JULY 16, 2015.
10. SOILS PRESENT: FALLSINGTON SANDY LOAMS, B/D HSG (FadA)
 HAMBROOK SANDY LOAD, B HSG (HbB)
 HAMMONTON LOAMY SAND, B HSG (HmA)
 HURLOCK LOAMY SAND, A/D HSG (HuA)
 MATTAPEX FINE SANDY LOAM, C HSG (MpA)
 RUNCLINT LOAMY SAND, A HSG (RuB)
 WOODSTOWN SANDY LOAM, C HSG (WddA)
 WOODSTOWN SANDY LOAM, C HSG (WddB)
11. THE PROJECT IS NOT SUBJECT TO FOREST CONSERVATION LAW BASED ON THE TOTAL AREA OF TREES BEING CLEARED BEING LESS THAN THE REGULATORY THRESHOLD.
12. THE PUMP STATION UTILITY PARCEL RESIDES WITHIN THE CRITICAL AREA BUFFER, RESOURCE CONSERVATION AREA.
13. LIMIT OF DISTURBANCE = 84,815 S.F. = 1.95 AC.

STORMWATER MANAGEMENT CERTIFICATION

- ALL PHASES OF STORMWATER MANAGEMENT CALCULATIONS, STRUCTURE DESIGN, AND CONSTRUCTION WILL ADHERE TO CURRENT MARYLAND STANDARDS AND SPECIFICATIONS FOR STORMWATER MANAGEMENT AND THE STORMWATER MANAGEMENT PLAN FOR THIS SITE.
- ALL INFORMATION SET FORTH IN THIS PLAN ACCURATELY CONVEYS THIS SITE'S CONDITIONS TO THE BEST OF MY KNOWLEDGE.
- ALL STRUCTURAL DEVICES FOR STORMWATER MANAGEMENT WILL BE PROTECTED BY PROPER SOIL EROSION AND SEDIMENT CONTROL DEVICES UNTIL ALL CONTRIBUTING AREAS HAS PASSED FINAL STABILIZATION INSPECTION.
- UPON COMPLETION OF THE PROJECT, AN AS-CONSTRUCTED SURVEY, NOTICE OF CONSTRUCTION COMPLETION (NOCC), AND LETTER OF CERTIFICATION MUST BE SUBMITTED TO THE DEPARTMENT, EXCEPT INDIVIDUAL SINGLE FAMILY DWELLINGS. ONCE REVIEW IS COMPLETE AND APPROVED, A CERTIFICATE OF OCCUPANCY CAN BE ISSUED.

[signature] 9/5/23
STEVEN LEMASTERS, P.E. — DATE
PROJECT MANAGER
EA ENGINEERING, SCIENCE, AND TECHNOLOGY, INC. PBC

EROSION AND SEDIMENT CONTROL
OWNER / DEVELOPER / APPLICANT'S CERTIFICATION

I HEREBY CERTIFY THAT I HAVE REVIEWED THIS EROSION AND SEDIMENT CONTROL PLAN AND THAT ALL CLEARING, GRADING, AND CONSTRUCTION, AND/OR DEVELOPMENT WILL BE DONE PURSUANT TO THIS PLAN AND THAT ANY RESPONSIBLE PERSONNEL INVOLVED IN THE CONSTRUCTION PROJECT WILL HAVE A CERTIFICATE OF ATTENDANCE AT THE DEPARTMENT OF THE ENVIRONMENT APPROVED TRAINING PROGRAM FOR THE CONTROL OF SEDIMENT AND EROSION BEFORE BEGINNING THE PROJECT. I HEREBY CERTIFY THE RIGHT OF ENTRY FOR PERIODIC ON-SITE EVALUATION BY THE APPROPRIATE ENFORCEMENT AUTHORITY AND/OR MDE.

[signature] 9/6/23
OWNER/DEVELOPER/APPLICANT — DATE

DALLAS BAKER, P.E.
DIRECTOR OF PUBLIC WORKS
WORCESTER COUNTY, MARYLAND

REVISIONS		
NO.	DATE	BY

DESCRIPTION

DESIGN INFORMATION
DESIGNED BY: SCL/NWH
DRAWN BY: SCL/NWH
CHECKED BY: AS/DOK
PROJECT MANAGER: SCL

PROFESSIONAL CERTIFICATION. I HEREBY CERTIFY THAT THESE DOCUMENTS WERE PREPARED OR APPROVED BY ME, AND THAT I AM A DULY LICENSED PROFESSIONAL ENGINEER UNDER THE LAWS OF THE STATE OF MARYLAND, LICENSE NO. 55422 EXPIRATION DATE: DECEMBER 16, 2023

SEAL

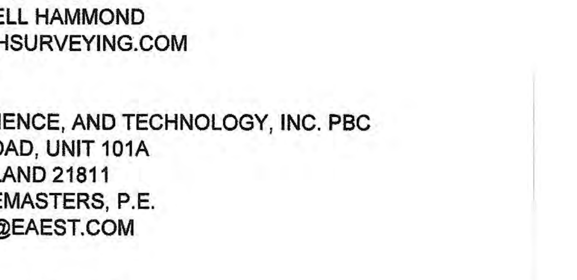

WORCESTER COUNTY DEPARTMENT OF PUBLIC WORKS
LEWIS ROAD GRAVITY SEWER SYSTEM AND PUMP STATION

WORCESTER COUNTY, MARYLAND

TITLE SHEET

EA Engineering, Science, and Technology, Inc., PBC
11200 Racetrack Road, Unit A101
Ocean Pines, Maryland 21811
(410) 641-5341
www.eaest.com

SCALE AS SHOWN

FULL SIZE PLOT: 24" x 36"

DATE: SEPTEMBER 2023

PROJECT NUMBER: 6250909

G-001

SHEET: 1 OF 22

100% PLANS - NOT FOR CONSTRUCTION

ABBREVIATIONS

AC	ACRES
APPRX	APPROXIMATELY
BLDG	BUILDING
CATV	CABLE TELEVISION
COMM	COMMUNICATIONS
CONC	CONCRETE
CL	CENTERLINE
DIA	DIAMETER
EL/ELEV	ELEVATION
ESC	EROSION AND SEDIMENT CONTROL
EX/EXIST	EXISTING
FL	FLOWLINE
FT	FEET
INV	INVERT
IW	INSIDE OF WALL
NAD 83	NORTH AMERICAN DATUM OF 1983
NAVD 88	NORTH AMERICAN VERTICAL DATUM OF 1988
NO.	NUMBER
OVHD/OH	OVERHEAD
PR	PROPOSED
SCH	SCHEDULE
SD	STORM DRAIN
SS	SANITARY SEWER
SQ FT	SQUARE FEET
SWM	STORMWATER MANAGEMENT
TC	TOP OF CURB
TW	TOP OF WALL
TYP	TYPICAL
UGND/UG	UNDERGROUND
W/	WITH
WSEL	WATER SURFACE ELEVATION

LEGEND

DESCRIPTION	EXISTING	PROPOSED
COMM CATV PEDESTAL	C	N/A
COMM TELEPHONE PEDESTAL	T	N/A
ELECTRIC LIGHT POST	#	N/A
ELECTRIC UTILITY POLE	#	N/A
ELECTRIC GUY WIRE		N/A
ELECTRIC GUY POLE		N/A
ELECTRIC OVHD LINE	OHE OHE	N/A
ELECTRIC UGND LINE	N/A	E E
PROPERTY MARKER - IRON ROD SET	N/A	
PROPERTY MARKER - FOUND STONE		N/A
PROPERTY BOUNDARY		
PROPERTY BOUNDARY ADJOINER		N/A
RIGHT-OF-WAY		N/A
SANITARY SEWER CLEANOUT	SCO	SCO
SANITARY SEWER LINE	SS SS	SS SS
SANITARY SEWER MANHOLE	N/A	S
SITE FLOW ARROW	N/A	
SITE SIGN		N/A
SITE BOLLARD		N/A
SITE SPOT ELEVATION	7.6	7.60
SITE CONTOUR	6	6
SITE CONCRETE		
SITE FENCE	X X X X	X X X X
STORM DRAIN CATCH BASIN	CB	N/A
STORM DRAIN LINE		SD SD
WATER METER	W	N/A
WATER LINE	W W	N/A
PLAN NORTH ARROW	N/A	
PLAN KEYNOTE CALLOUT	N/A	1
ESC LIMIT OF DISTURBANCE	N/A	LOD LOD
ESC STABILIZED CONSTRUCTION ENTRANCE	N/A	
ESC SUPER SILT FENCE	N/A	SSF SSF
RAIN GARDEN	N/A	
GRAVEL PAVEMENT		
ROAD CENTERLINE		N/A
CRITICAL AREA BUFFER		N/A

BENCHMARK DATA

BENCHMARK #	ELEVATION	NORTHING	EASTING	DESCRIPTION
1	7.66	1842444.65	237532.03	1/4" IRON ROD
2	5.58	1842239.16	237050.00	1/4" IRON ROD
3	5.87	1842465.16	236683.90	MAG SPIKE SET
4	8.47	1842992.44	235967.92	MAG SPIKE SET
5	8.64	1843165.96	235512.45	MAG SPIKE SET
6	9.89	1842949.88	235119.86	MAG SPIKE SET
7	7.73	1842743.97	234703.18	MAG SPIKE SET
8	8.13	1842801.78	233668.64	MAG SPIKE SET
9	8.13	1842890.71	233259.09	MAG SPIKE SET

OVERALL EXISTING CONDITIONS AND KEY SHEET
SCALE: 1" = 300'

REVISIONS			
NO.	DATE	BY	DESCRIPTION

DESIGN INFORMATION

DESIGNED BY:	SCL/NVH
DRAWN BY:	SCL/NVH
CHECKED BY:	AS/DOK
PROJECT MANAGER:	SCL

PROFESSIONAL CERTIFICATION. I HEREBY CERTIFY THAT THESE DOCUMENTS WERE PREPARED OR APPROVED BY ME, AND THAT I AM A DULY LICENSED PROFESSIONAL ENGINEER UNDER THE LAWS OF THE STATE OF MARYLAND, LICENSE NO. 55422
EXPIRATION DATE: DECEMBER 16, 2023

SEAL: STATE OF MARYLAND · STEVEN C. LEMASTERS · 55422 · PROFESSIONAL ENGINEER · 09/05/23

WORCESTER COUNTY DEPARTMENT OF PUBLIC WORKS
LEWIS ROAD GRAVITY SEWER SYSTEM AND PUMP STATION

WORCESTER COUNTY, MARYLAND

OVERALL EXISTING CONDITIONS AND KEY SHEET

EA Engineering, Science, and Technology, Inc., PBC
11200 Racetrack Road, Unit A101
Ocean Pines, Maryland 21811
(410) 641-5341
www.eaest.com

0 150' 300' 600'
GRAPHIC SCALE IN FEET

FULL SIZE PLOT: 24" x 36"
DATE: SEPTEMBER 2023
PROJECT NUMBER: 6250909

C-101
SHEET: 2 OF 22

100% PLANS - NOT FOR CONSTRUCTION

FILE PATH: \\OCEANPINES\PROJECTS\DOCS\WORCESTER COUNTY\6250909 - LEWIS ROAD SEWER CONNECTION\CAD\PRODUCTION\DESIGN SET\C-101 OVERALL EXISTING CONDITIONS AND KEY SHEET.DWG [C-101] LEMASTERS, STEVEN 10/24/2024 12:03 PM

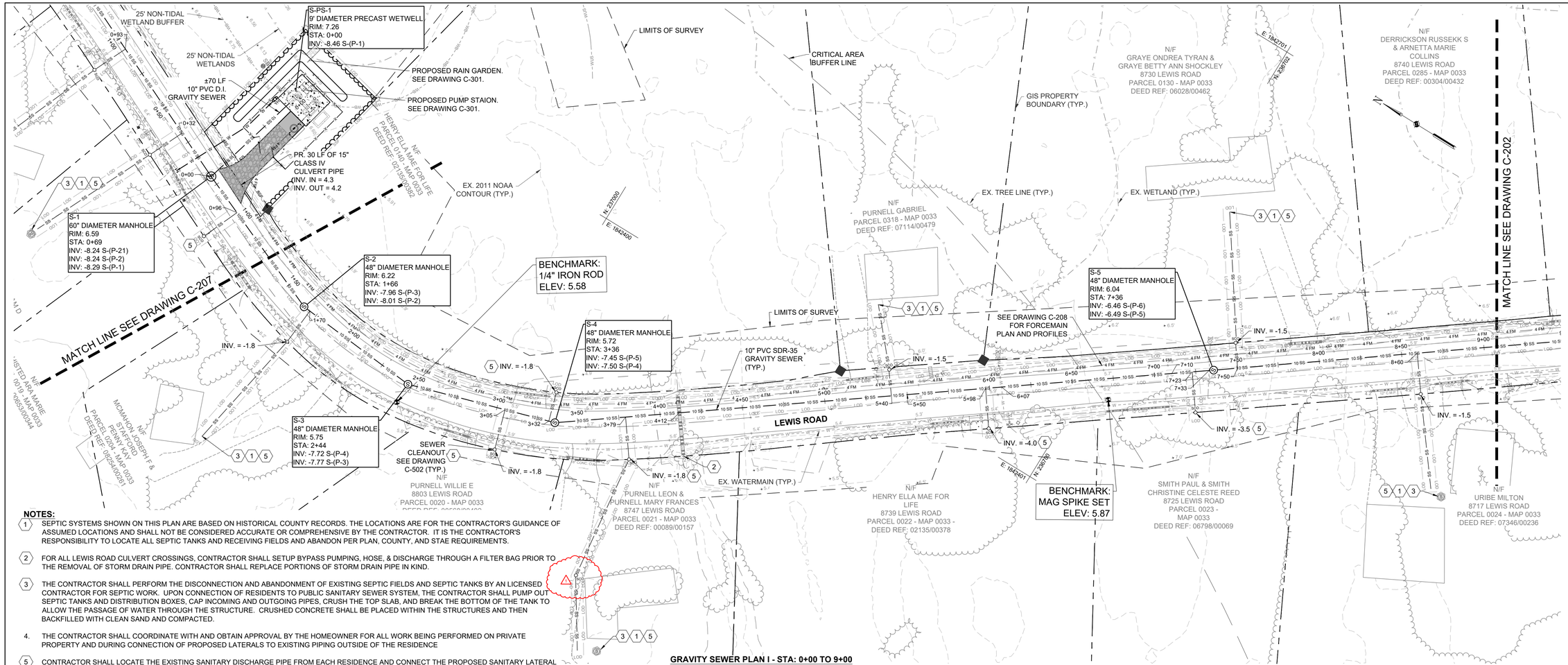

GRAVITY SEWER PLAN I - STA: 0+00 TO 9+00
SCALE: 1" = 30'

NOTES:

1. SEPTIC SYSTEMS SHOWN ON THIS PLAN ARE BASED ON HISTORICAL COUNTY RECORDS. THE LOCATIONS ARE FOR THE CONTRACTOR'S GUIDANCE OF ASSUMED LOCATIONS AND SHALL NOT BE CONSIDERED ACCURATE OR COMPREHENSIVE BY THE CONTRACTOR. IT IS THE CONTRACTOR'S RESPONSIBILITY TO LOCATE ALL SEPTIC TANKS AND RECEIVING FIELDS AND ABANDON PER PLAN, COUNTY, AND STAE REQUIREMENTS.
2. FOR ALL LEWIS ROAD CULVERT CROSSINGS, CONTRACTOR SHALL SETUP BYPASS PUMPING, HOSE, & DISCHARGE THROUGH A FILTER BAG PRIOR TO THE REMOVAL OF STORM DRAIN PIPE. CONTRACTOR SHALL REPLACE PORTIONS OF STORM DRAIN PIPE IN KIND.
3. THE CONTRACTOR SHALL PERFORM THE DISCONNECTION AND ABANDONMENT OF EXISTING SEPTIC FIELDS AND SEPTIC TANKS BY AN LICENSED CONTRACTOR FOR SEPTIC WORK. UPON CONNECTION OF RESIDENTS TO PUBLIC SANITARY SEWER SYSTEM, THE CONTRACTOR SHALL PUMP OUT SEPTIC TANKS AND DISTRIBUTION BOXES, CAP INCOMING AND OUTGOING PIPES, CRUSH THE TOP SLAB, AND BREAK THE BOTTOM OF THE TANK TO ALLOW THE PASSAGE OF WATER THROUGH THE STRUCTURE. CRUSHED CONCRETE SHALL BE PLACED WITHIN THE STRUCTURES AND THEN BACKFILLED WITH CLEAN SAND AND COMPACTED.
4. THE CONTRACTOR SHALL COORDINATE WITH AND OBTAIN APPROVAL BY THE HOMEOWNER FOR ALL WORK BEING PERFORMED ON PRIVATE PROPERTY AND DURING CONNECTION OF PROPOSED LATERALS TO EXISTING PIPING OUTSIDE OF THE RESIDENCE
5. CONTRACTOR SHALL LOCATE THE EXISTING SANITARY DISCHARGE PIPE FROM EACH RESIDENCE AND CONNECT THE PROPOSED SANITARY LATERAL IN A SAFE LOCATION. AT NO TIME SHALL EXCAVATION OCCUR CLOSER THAN FIVE FEET FROM A STRUCTURE'S FOUNDATION. BASED ON EXISTING PIPE DEPTH, CONTRACTOR MAY ADJUST CLEANOUT INVERT AT THE MAIN BY MAINTAINING A MINIMUM OF 3.5' OF COVER AND 2% SLOPE ON PIPE LATERAL. IF THERE IS NO EXITING RESIDENCE, THEN LATERAL SHALL BE INSTALLED AT MAXIMUM DEPTH PER THE PLAN.

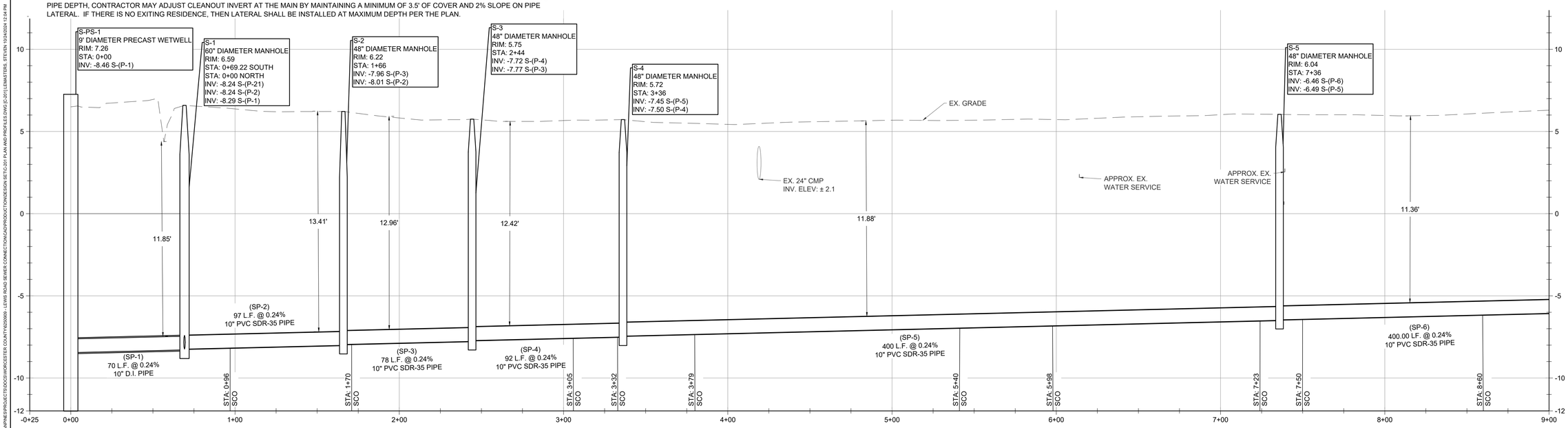

GRAVITY SEWER PROFILE I - STA: 0+00 TO 9+00
HORIZONTAL SCALE: 1" = 30'
VERTICAL SCALE: 1" = 3'

GRAPHIC SCALE IN FEET: 0 15' 30' 60
GRAPHIC SCALE IN FEET: 0 1.5' 3' 6'

REVISIONS			
NO.	DATE	BY	DESCRIPTION
1	2024/09/25	NWH	REVISED PER USDA COMMENTS

DESIGN INFORMATION
DESIGNED BY: SCL/NWH
DRAWN BY: SCL/NWH
CHECKED BY: AS/DOK
PROJECT MANAGER: SCL

PROFESSIONAL CERTIFICATION. I HEREBY CERTIFY THAT THESE DOCUMENTS WERE PREPARED OR APPROVED BY ME, AND THAT I AM A DULY LICENSED PROFESSIONAL ENGINEER UNDER THE LAWS OF THE STATE OF MARYLAND, LICENSE NO. 55422 EXPIRATION DATE: DECEMBER 16, 2023

SEAL: STATE OF MARYLAND · STEVEN C. LEWISTER · 55422 · PROFESSIONAL ENGINEER · 09/05/23

WORCESTER COUNTY DEPARTMENT OF PUBLIC WORKS
LEWIS ROAD GRAVITY SEWER SYSTEM AND PUMP STATION

WORCESTER COUNTY, MARYLAND

GRAVITY SEWER PLAN AND PROFILE SHEET I

EA Engineering, Science, and Technology, Inc., PBC
11200 Racetrack Road, Unit A101
Ocean Pines, Maryland 21811
(410) 641-5341
www.eaest.com

AS SHOWN

FULL SIZE PLOT: 24" x 36"

DATE: SEPTEMBER 2023

PROJECT NUMBER: 6250909

C-201

SHEET: 3 OF 22

100% PLANS - NOT FOR CONSTRUCTION

FILE PATH: \\OCEANPINES\PROJECTS\DOCS\WORCESTER COUNTY\6250909 - LEWIS ROAD SEWER CONNECTION\CAD\PRODUCTION\DESIGN SET\C-201 PLAN AND PROFILES.DWG [C-201] LEWISTERS, STEVEN 10/24/2024 12:24 PM

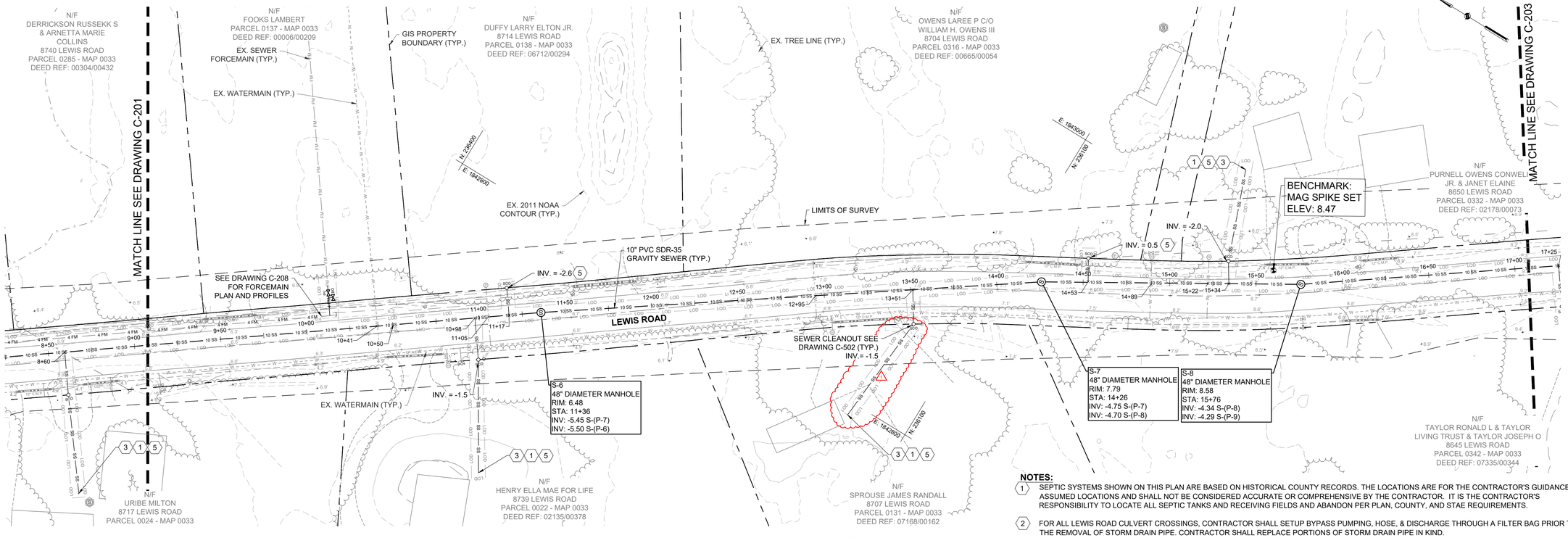

GRAVITY SEWER PLAN II - STA: 9+00 TO 17+00
SCALE: 1" = 30'

NOTES:

1. SEPTIC SYSTEMS SHOWN ON THIS PLAN ARE BASED ON HISTORICAL COUNTY RECORDS. THE LOCATIONS ARE FOR THE CONTRACTOR'S GUIDANCE OF ASSUMED LOCATIONS AND SHALL NOT BE CONSIDERED ACCURATE OR COMPREHENSIVE BY THE CONTRACTOR. IT IS THE CONTRACTOR'S RESPONSIBILITY TO LOCATE ALL SEPTIC TANKS AND RECEIVING FIELDS AND ABANDON PER PLAN, COUNTY, AND STAE REQUIREMENTS.
2. FOR ALL LEWIS ROAD CULVERT CROSSINGS, CONTRACTOR SHALL SETUP BYPASS PUMPING, HOSE, & DISCHARGE THROUGH A FILTER BAG PRIOR TO THE REMOVAL OF STORM DRAIN PIPE. CONTRACTOR SHALL REPLACE PORTIONS OF STORM DRAIN PIPE IN KIND.
3. THE CONTRACTOR SHALL PERFORM THE DISCONNECTION AND ABANDONMENT OF EXISTING SEPTIC FIELDS AND SEPTIC TANKS BY AN LICENSED CONTRACTOR FOR SEPTIC WORK. UPON CONNECTION OF RESIDENTS TO PUBLIC SANITARY SEWER SYSTEM, THE CONTRACTOR SHALL PUMP OUT SEPTIC TANKS AND DISTRIBUTION BOXES, CAP INCOMING AND OUTGOING PIPES, CRUSH THE TOP SLAB, AND BREAK THE BOTTOM OF THE TANK TO ALLOW THE PASSAGE OF WATER THROUGH THE STRUCTURE. CRUSHED CONCRETE SHALL BE PLACED WITHIN THE STRUCTURES AND THEN BACKFILLED WITH CLEAN SAND AND COMPACTED.
4. THE CONTRACTOR SHALL COORDINATE WITH AND OBTAIN APPROVAL BY THE HOMEOWNER FOR ALL WORK BEING PERFORMED ON PRIVATE PROPERTY AND DURING CONNECTION OF PROPOSED LATERALS TO EXISTING PIPING OUTSIDE OF THE RESIDENCE
5. CONTRACTOR SHALL LOCATE THE EXISTING SANITARY DISCHARGE PIPE FROM EACH RESIDENCE AND CONNECT THE PROPOSED SANITARY LATERAL IN A SAFE LOCATION. AT NO TIME SHALL EXCAVATION OCCUR CLOSER THAN FIVE FEET FROM A STRUCTURE'S FOUNDATION. BASED ON EXISTING PIPE DEPTH, CONTRACTOR MAY ADJUST CLEANOUT INVERT AT THE MAIN BY MAINTAINING A MINIMUM OF 3.5' OF COVER AND 2% SLOPE ON PIPE LATERAL. IF THERE IS NO EXITING RESIDENCE, THEN LATERAL SHALL BE INSTALLED AT MAXIMUM DEPTH PER THE PLAN.

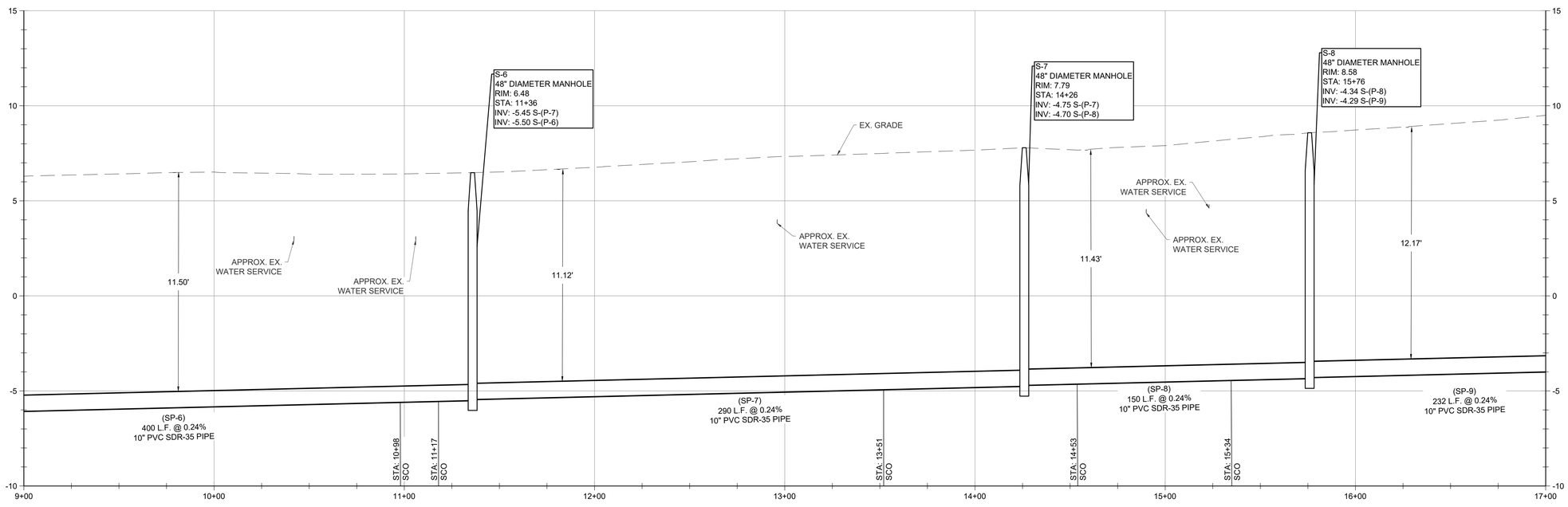

GRAVITY SEWER PROFILE II - STA: 9+00 TO 17+00
HORIZONTAL SCALE: 1" = 30'
VERTICAL SCALE: 1" = 3'

GRAPHIC SCALE IN FEET (0, 15', 30', 60')

GRAPHIC SCALE IN FEET (0, 1.5', 3', 6')

REVISIONS

NO.	DATE	BY	DESCRIPTION
1	2024/09/05	NHH	REVISED PER USDA COMMENTS

DESIGN INFORMATION

DESIGNED BY:	DRAWN BY:	CHECKED BY:	PROJECT MANAGER:
SCL/NVH	SCL/NVH	AS/DOK	SCL

PROFESSIONAL CERTIFICATION. I HEREBY CERTIFY THAT THESE DOCUMENTS WERE PREPARED OR APPROVED BY ME, AND THAT I AM A DULY LICENSED PROFESSIONAL ENGINEER UNDER THE LAWS OF THE STATE OF MARYLAND, LICENSE NO. 55422
EXPIRATION DATE: DECEMBER 16, 2023

SEAL: STATE OF MARYLAND — STEVEN C. LEWISTER — 55422 — PROFESSIONAL ENGINEER — 09/05/23

WORCESTER COUNTY DEPARTMENT OF PUBLIC WORKS
LEWIS ROAD GRAVITY SEWER SYSTEM AND PUMP STATION

WORCESTER COUNTY, MARYLAND

GRAVITY SEWER PLAN AND PROFILE SHEET II

EA Engineering, Science, and Technology, Inc., PBC
11200 Racetrack Road, Unit A101
Ocean Pines, Maryland 21811
(410) 641-5341
www.eaest.com

AS SHOWN

FULL SIZE PLOT: 24" x 36"

DATE: SEPTEMBER 2023

PROJECT NUMBER: 6250909

C-202

SHEET: 4 OF 22

100% PLANS - NOT FOR CONSTRUCTION

FILE PATH: \\DCSANPNE\PROJECTS\DOCS\WORCESTER COUNTY\6250909 - LEWIS ROAD SEWER CONNECTION\CAD\PRODUCTION\DESIGN\SETIC\201 PLAN AND PROFILES.DWG [C-202] LEWISTERS, STEVEN 10/24/2024 12:24 PM

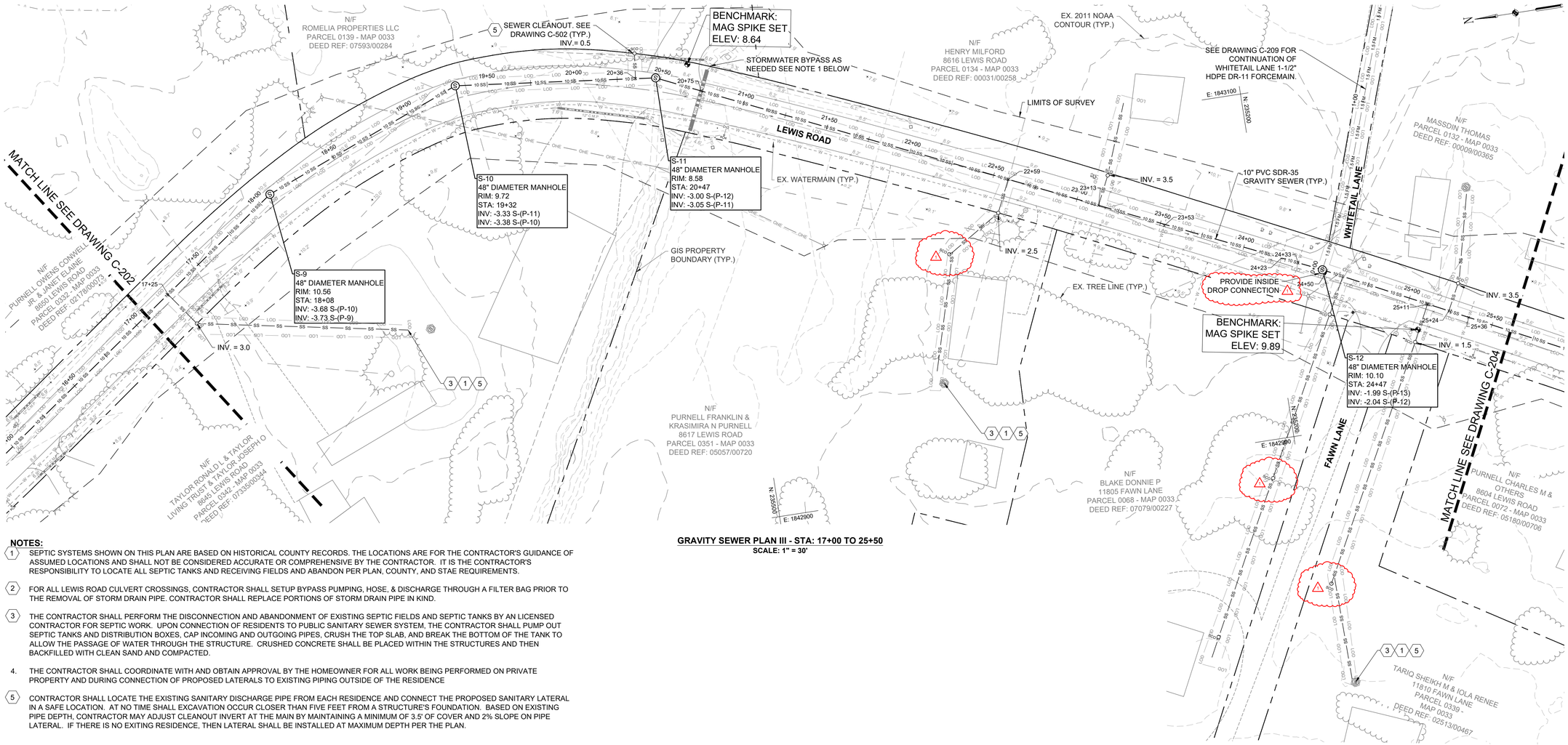

GRAVITY SEWER PLAN III - STA: 17+00 TO 25+50
SCALE: 1" = 30'

NOTES:

1. SEPTIC SYSTEMS SHOWN ON THIS PLAN ARE BASED ON HISTORICAL COUNTY RECORDS. THE LOCATIONS ARE FOR THE CONTRACTOR'S GUIDANCE OF ASSUMED LOCATIONS AND SHALL NOT BE CONSIDERED ACCURATE OR COMPREHENSIVE BY THE CONTRACTOR. IT IS THE CONTRACTOR'S RESPONSIBILITY TO LOCATE ALL SEPTIC TANKS AND RECEIVING FIELDS AND ABANDON PER PLAN, COUNTY, AND STAE REQUIREMENTS.
2. FOR ALL LEWIS ROAD CULVERT CROSSINGS, CONTRACTOR SHALL SETUP BYPASS PUMPING, HOSE, & DISCHARGE THROUGH A FILTER BAG PRIOR TO THE REMOVAL OF STORM DRAIN PIPE. CONTRACTOR SHALL REPLACE PORTIONS OF STORM DRAIN PIPE IN KIND.
3. THE CONTRACTOR SHALL PERFORM THE DISCONNECTION AND ABANDONMENT OF EXISTING SEPTIC FIELDS AND SEPTIC TANKS BY AN LICENSED CONTRACTOR FOR SEPTIC WORK. UPON CONNECTION OF RESIDENTS TO PUBLIC SANITARY SEWER SYSTEM, THE CONTRACTOR SHALL PUMP OUT SEPTIC TANKS AND DISTRIBUTION BOXES, CAP INCOMING AND OUTGOING PIPES, CRUSH THE TOP SLAB, AND BREAK THE BOTTOM OF THE TANK TO ALLOW THE PASSAGE OF WATER THROUGH THE STRUCTURE. CRUSHED CONCRETE SHALL BE PLACED WITHIN THE STRUCTURES AND THEN BACKFILLED WITH CLEAN SAND AND COMPACTED.
4. THE CONTRACTOR SHALL COORDINATE WITH AND OBTAIN APPROVAL BY THE HOMEOWNER FOR ALL WORK BEING PERFORMED ON PRIVATE PROPERTY AND DURING CONNECTION OF PROPOSED LATERALS TO EXISTING PIPING OUTSIDE OF THE RESIDENCE
5. CONTRACTOR SHALL LOCATE THE EXISTING SANITARY DISCHARGE PIPE FROM EACH RESIDENCE AND CONNECT THE PROPOSED SANITARY LATERAL IN A SAFE LOCATION. AT NO TIME SHALL EXCAVATION OCCUR CLOSER THAN FIVE FEET FROM A STRUCTURE'S FOUNDATION. BASED ON EXISTING PIPE DEPTH, CONTRACTOR MAY ADJUST CLEANOUT INVERT AT THE MAIN BY MAINTAINING A MINIMUM OF 3.5' OF COVER AND 2% SLOPE ON PIPE LATERAL. IF THERE IS NO EXITING RESIDENCE, THEN LATERAL SHALL BE INSTALLED AT MAXIMUM DEPTH PER THE PLAN.

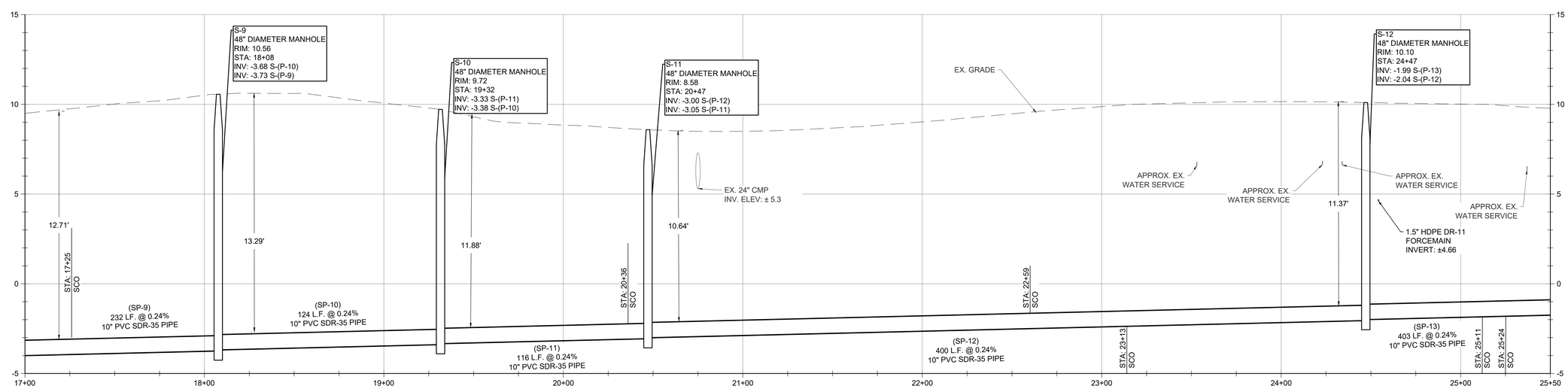

GRAVITY SEWER PROFILE III - STA: 17+00 TO 25+50
HORIZONTAL SCALE: 1" = 30'
VERTICAL SCALE: 1" = 3'

GRAPHIC SCALE IN FEET (0, 15', 30', 60')

GRAPHIC SCALE IN FEET (0, 1.5', 3', 6')

NO.	DATE	BY	REVISIONS DESCRIPTION
1	2024/09/05	NHH	REVISED PER USDA COMMENTS

DESIGN INFORMATION
DESIGNED BY: SCL/NVH
DRAWN BY: SCL/NVH
CHECKED BY: AS/DOK
PROJECT MANAGER: SCL

PROFESSIONAL CERTIFICATION. I HEREBY CERTIFY THAT THESE DOCUMENTS WERE PREPARED OR APPROVED BY ME, AND THAT I AM A DULY LICENSED PROFESSIONAL ENGINEER UNDER THE LAWS OF THE STATE OF MARYLAND, LICENSE NO. 55422
EXPIRATION DATE: DECEMBER 16, 2023

SEAL: STATE OF MARYLAND — STEVEN C. LEMASTERS — 55422 — PROFESSIONAL ENGINEER — 09/05/23

WORCESTER COUNTY DEPARTMENT OF PUBLIC WORKS
LEWIS ROAD GRAVITY SEWER SYSTEM AND PUMP STATION

WORCESTER COUNTY, MARYLAND

GRAVITY SEWER PLAN AND PROFILE SHEET III

EA Engineering, Science, and Technology, Inc., PBC
11200 Racetrack Road, Unit A101
Ocean Pines, Maryland 21811
(410) 641-5341
www.eaest.com

AS SHOWN

FULL SIZE PLOT: 24" x 36"

DATE: SEPTEMBER 2023

PROJECT NUMBER: 6250909

C-203

SHEET: 5 OF 22

100% PLANS - NOT FOR CONSTRUCTION

FILE PATH: \\DCSANPNE\PROJECTS\DOCS\WORCESTER COUNTY\6250909 - LEWIS ROAD SEWER CONNECTION\CAD\PRODUCTION\DESIGN\SETIC\201 PLAN AND PROFILES.DWG\[C-203] LEMASTERS, STEVEN 10/24/2024 1:24 PM

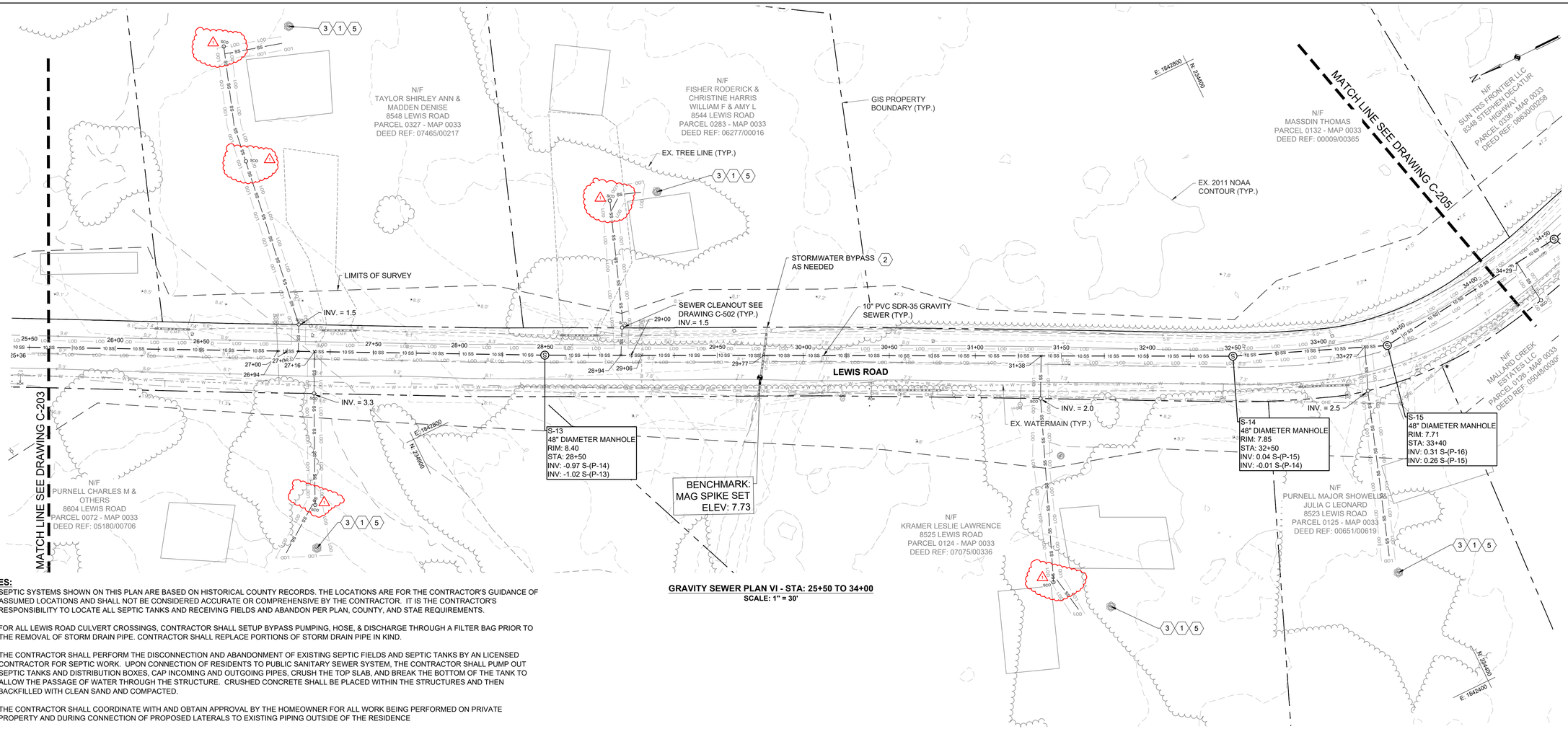

GRAVITY SEWER PLAN VI - STA: 25+50 TO 34+00
SCALE: 1" = 30'

NOTES:

1. SEPTIC SYSTEMS SHOWN ON THIS PLAN ARE BASED ON HISTORICAL COUNTY RECORDS. THE LOCATIONS ARE FOR THE CONTRACTOR'S GUIDANCE OF ASSUMED LOCATIONS AND SHALL NOT BE CONSIDERED ACCURATE OR COMPREHENSIVE BY THE CONTRACTOR. IT IS THE CONTRACTOR'S RESPONSIBILITY TO LOCATE ALL SEPTIC TANKS AND RECEIVING FIELDS AND ABANDON PER PLAN, COUNTY, AND STAE REQUIREMENTS.
2. FOR ALL LEWIS ROAD CULVERT CROSSINGS, CONTRACTOR SHALL SETUP BYPASS PUMPING, HOSE, & DISCHARGE THROUGH A FILTER BAG PRIOR TO THE REMOVAL OF STORM DRAIN PIPE. CONTRACTOR SHALL REPLACE PORTIONS OF STORM DRAIN PIPE IN KIND.
3. THE CONTRACTOR SHALL PERFORM THE DISCONNECTION AND ABANDONMENT OF EXISTING SEPTIC FIELDS AND SEPTIC TANKS BY AN LICENSED CONTRACTOR FOR SEPTIC WORK. UPON CONNECTION OF RESIDENTS TO PUBLIC SANITARY SEWER SYSTEM, THE CONTRACTOR SHALL PUMP OUT SEPTIC TANKS AND DISTRIBUTION BOXES, CAP INCOMING AND OUTGOING PIPES, CRUSH THE TOP SLAB, AND BREAK THE BOTTOM OF THE TANK TO ALLOW THE PASSAGE OF WATER THROUGH THE STRUCTURE. CRUSHED CONCRETE SHALL BE PLACED WITHIN THE STRUCTURES AND THEN BACKFILLED WITH CLEAN SAND AND COMPACTED.
4. THE CONTRACTOR SHALL COORDINATE WITH AND OBTAIN APPROVAL BY THE HOMEOWNER FOR ALL WORK BEING PERFORMED ON PRIVATE PROPERTY AND DURING CONNECTION OF PROPOSED LATERALS TO EXISTING PIPING OUTSIDE OF THE RESIDENCE
5. CONTRACTOR SHALL LOCATE THE EXISTING SANITARY DISCHARGE PIPE FROM EACH RESIDENCE AND CONNECT THE PROPOSED SANITARY LATERAL IN A SAFE LOCATION. AT NO TIME SHALL EXCAVATION OCCUR CLOSER THAN FIVE FEET FROM A STRUCTURE'S FOUNDATION. BASED ON EXISTING PIPE DEPTH, CONTRACTOR MAY ADJUST CLEANOUT INVERT AT THE MAIN BY MAINTAINING A MINIMUM OF 3.5' OF COVER AND 2% SLOPE ON PIPE LATERAL. IF THERE IS NO EXITING RESIDENCE, THEN LATERAL SHALL BE INSTALLED AT MAXIMUM DEPTH PER THE PLAN.

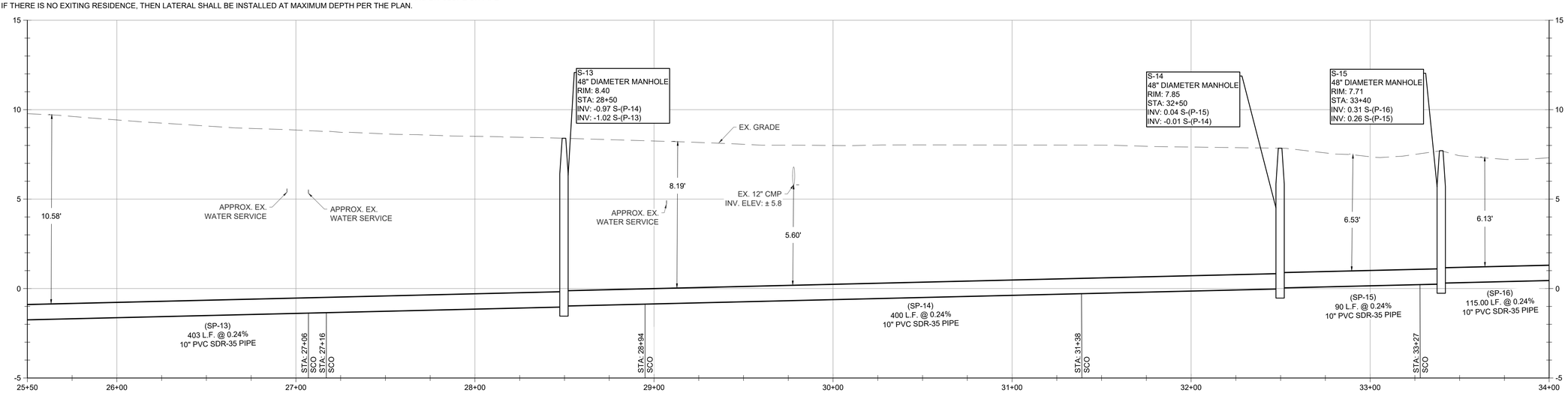

GRAVITY SEWER PROFILE VI - STA: 25+50 TO 34+00
HORIZONTAL SCALE: 1" = 30'
VERTICAL SCALE: 1" = 3'

0 15' 30' 60' GRAPHIC SCALE IN FEET

0 1.5' 3' 6' GRAPHIC SCALE IN FEET

NO.	DATE	BY	REVISIONS DESCRIPTION
1	2024/09/25	NHH	REVISED PER USDA COMMENTS

DESIGN INFORMATION
DESIGNED BY: SCL/NVH
DRAWN BY: SCL/NVH
CHECKED BY: AS/DOK
PROJECT MANAGER: SCL

PROFESSIONAL CERTIFICATION. I HEREBY CERTIFY THAT THESE DOCUMENTS WERE PREPARED OR APPROVED BY ME, AND THAT I AM A DULY LICENSED PROFESSIONAL ENGINEER UNDER THE LAWS OF THE STATE OF MARYLAND, LICENSE NO. 55422 EXPIRATION DATE: DECEMBER 16, 2023

SEAL: STATE OF MARYLAND · STEVEN C. LEMASTERS · 55422 · PROFESSIONAL ENGINEER · 09/05/23

WORCESTER COUNTY DEPARTMENT OF PUBLIC WORKS
LEWIS ROAD GRAVITY SEWER SYSTEM AND PUMP STATION

WORCESTER COUNTY, MARYLAND

GRAVITY SEWER PLAN AND PROFILE SHEET IV

EA Engineering, Science, and Technology, Inc., PBC
11200 Racetrack Road, Unit A101
Ocean Pines, Maryland 21811
(410) 641-5341
www.eaest.com

AS SHOWN

FULL SIZE PLOT: 24" x 36"

DATE: SEPTEMBER 2023

PROJECT NUMBER: 6250909

C-204

SHEET: 6 OF 22

100% PLANS - NOT FOR CONSTRUCTION

FILE PATH: \\OCEANPINES\PROJECTS\DOCS\WORCESTER COUNTY\6250909 - LEWIS ROAD SEWER CONNECTION\CAD\PRODUCTION\DESIGN\SEPTIC\SH PLAN AND PROFILES.DWG [C-204] LEMASTERS, STEVEN 10/24/2024 12:04 PM

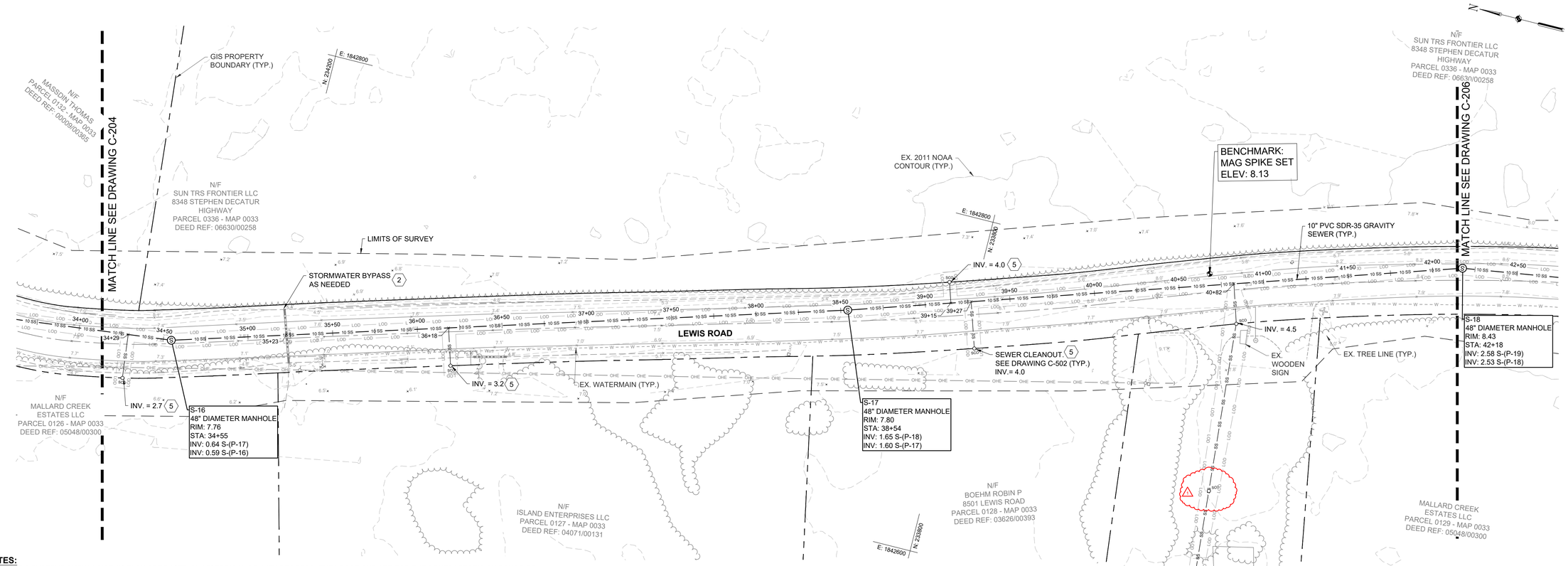

GRAVITY SEWER PLAN V - STA: 34+00 TO 42+00
SCALE: 1" = 30'

NOTES:

1. SEPTIC SYSTEMS SHOWN ON THIS PLAN ARE BASED ON HISTORICAL COUNTY RECORDS. THE LOCATIONS ARE FOR THE CONTRACTOR'S GUIDANCE OF ASSUMED LOCATIONS AND SHALL NOT BE CONSIDERED ACCURATE OR COMPREHENSIVE BY THE CONTRACTOR. IT IS THE CONTRACTOR'S RESPONSIBILITY TO LOCATE ALL SEPTIC TANKS AND RECEIVING FIELDS AND ABANDON PER PLAN, COUNTY, AND STAE REQUIREMENTS.
2. FOR ALL LEWIS ROAD CULVERT CROSSINGS, CONTRACTOR SHALL SETUP BYPASS PUMPING, HOSE, & DISCHARGE THROUGH A FILTER BAG PRIOR TO THE REMOVAL OF STORM DRAIN PIPE. CONTRACTOR SHALL REPLACE PORTIONS OF STORM DRAIN PIPE IN KIND.
3. THE CONTRACTOR SHALL PERFORM THE DISCONNECTION AND ABANDONMENT OF EXISTING SEPTIC FIELDS AND SEPTIC TANKS BY AN LICENSED CONTRACTOR FOR SEPTIC WORK. UPON CONNECTION OF RESIDENTS TO PUBLIC SANITARY SEWER SYSTEM, THE CONTRACTOR SHALL PUMP OUT SEPTIC TANKS AND DISTRIBUTION BOXES, CAP INCOMING AND OUTGOING PIPES, CRUSH THE TOP SLAB, AND BREAK THE BOTTOM OF THE TANK TO ALLOW THE PASSAGE OF WATER THROUGH THE STRUCTURE. CRUSHED CONCRETE SHALL BE PLACED WITHIN THE STRUCTURES AND THEN BACKFILLED WITH CLEAN SAND AND COMPACTED.
4. THE CONTRACTOR SHALL COORDINATE WITH AND OBTAIN APPROVAL BY THE HOMEOWNER FOR ALL WORK BEING PERFORMED ON PRIVATE PROPERTY AND DURING CONNECTION OF PROPOSED LATERALS TO EXISTING PIPING OUTSIDE OF THE RESIDENCE
5. CONTRACTOR SHALL LOCATE THE EXISTING SANITARY DISCHARGE PIPE FROM EACH RESIDENCE AND CONNECT THE PROPOSED SANITARY LATERAL IN A SAFE LOCATION. AT NO TIME SHALL EXCAVATION OCCUR CLOSER THAN FIVE FEET FROM A STRUCTURE'S FOUNDATION. BASED ON EXISTING PIPE DEPTH, CONTRACTOR MAY ADJUST CLEANOUT INVERT AT THE MAIN BY MAINTAINING A MINIMUM OF 3.5' OF COVER AND 2% SLOPE ON PIPE LATERAL. IF THERE IS NO EXITING RESIDENCE, THEN LATERAL SHALL BE INSTALLED AT MAXIMUM DEPTH PER THE PLAN.

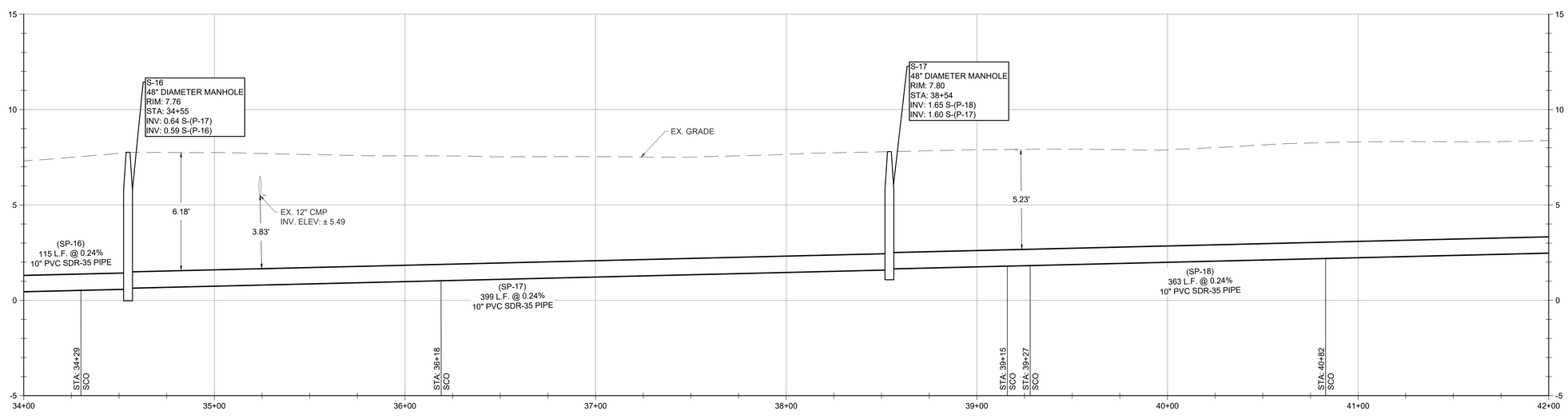

GRAVITY SEWER PROFILE V - STA: 34+00 TO 42+00
HORIZONTAL SCALE: 1" = 30'
VERTICAL SCALE: 1" = 3'

0 15' 30' 60' GRAPHIC SCALE IN FEET

0 1.5' 3' 6' GRAPHIC SCALE IN FEET

REVISIONS			
NO.	DATE	BY	DESCRIPTION
1	2024/09/05	NHH	REVISED PER USDA COMMENTS

DESIGN INFORMATION

DESIGNED BY:	DRAWN BY:	CHECKED BY:	PROJECT MANAGER:
SCL/NVH	SCL/NVH	AS/DOK	SCL

PROFESSIONAL CERTIFICATION. I HEREBY CERTIFY THAT THESE DOCUMENTS WERE PREPARED OR APPROVED BY ME, AND THAT I AM A DULY LICENSED PROFESSIONAL ENGINEER UNDER THE LAWS OF THE STATE OF MARYLAND, LICENSE NO. 55422 EXPIRATION DATE: DECEMBER 16, 2023

SEAL

STATE OF MARYLAND STEVEN C. LEWISTER 55422 PROFESSIONAL ENGINEER 09/05/23

WORCESTER COUNTY DEPARTMENT OF PUBLIC WORKS
LEWIS ROAD GRAVITY SEWER SYSTEM AND PUMP STATION

WORCESTER COUNTY, MARYLAND

GRAVITY SEWER PLAN AND PROFILE SHEET V

EA Engineering, Science, and Technology, Inc., PBC
11200 Racetrack Road, Unit A101
Ocean Pines, Maryland 21811
(410) 641-5341
www.eaest.com

AS SHOWN

FULL SIZE PLOT: 24" x 36"

DATE: SEPTEMBER 2023

PROJECT NUMBER: 6250909

C-205

SHEET: 7 OF 22

100% PLANS - NOT FOR CONSTRUCTION

FILE PATH: \\DCSANPINESPROJECTS\DOCS\WORCESTER COUNTY\6250909 - LEWIS ROAD SEWER CONNECTION\CADPRODUCTION\DESIGN SET\C-201 PLAN AND PROFILES.DWG [C-205] LEWISTER, STEVEN 10/24/2024 12:06 PM

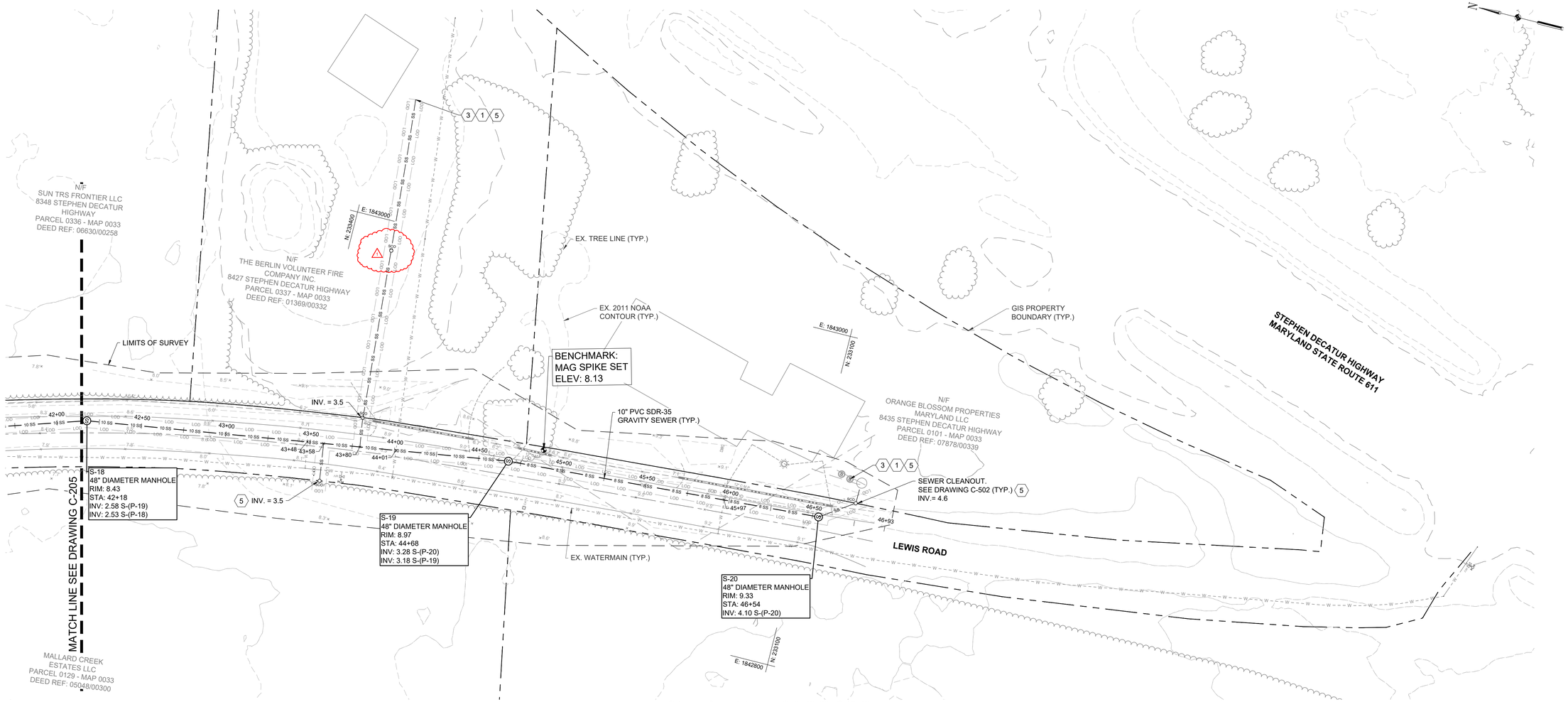

GRAVITY SEWER PLAN VI - STA: 42+00 TO 47+42
SCALE: 1" = 30'

NOTES:

1. SEPTIC SYSTEMS SHOWN ON THIS PLAN ARE BASED ON HISTORICAL COUNTY RECORDS. THE LOCATIONS ARE FOR THE CONTRACTOR'S GUIDANCE OF ASSUMED LOCATIONS AND SHALL NOT BE CONSIDERED ACCURATE OR COMPREHENSIVE BY THE CONTRACTOR. IT IS THE CONTRACTOR'S RESPONSIBILITY TO LOCATE ALL SEPTIC TANKS AND RECEIVING FIELDS AND ABANDON PER PLAN, COUNTY, AND STAE REQUIREMENTS.
2. FOR ALL LEWIS ROAD CULVERT CROSSINGS, CONTRACTOR SHALL SETUP BYPASS PUMPING, HOSE, & DISCHARGE THROUGH A FILTER BAG PRIOR TO THE REMOVAL OF STORM DRAIN PIPE. CONTRACTOR SHALL REPLACE PORTIONS OF STORM DRAIN PIPE IN KIND.
3. THE CONTRACTOR SHALL PERFORM THE DISCONNECTION AND ABANDONMENT OF EXISTING SEPTIC FIELDS AND SEPTIC TANKS BY AN LICENSED CONTRACTOR FOR SEPTIC WORK. UPON CONNECTION OF RESIDENTS TO PUBLIC SANITARY SEWER SYSTEM, THE CONTRACTOR SHALL PUMP OUT SEPTIC TANKS AND DISTRIBUTION BOXES, CAP INCOMING AND OUTGOING PIPES, CRUSH THE TOP SLAB, AND BREAK THE BOTTOM OF THE TANK TO ALLOW THE PASSAGE OF WATER THROUGH THE STRUCTURE. CRUSHED CONCRETE SHALL BE PLACED WITHIN THE STRUCTURES AND THEN BACKFILLED WITH CLEAN SAND AND COMPACTED.
4. THE CONTRACTOR SHALL COORDINATE WITH AND OBTAIN APPROVAL BY THE HOMEOWNER FOR ALL WORK BEING PERFORMED ON PRIVATE PROPERTY AND DURING CONNECTION OF PROPOSED LATERALS TO EXISTING PIPING OUTSIDE OF THE RESIDENCE
5. CONTRACTOR SHALL LOCATE THE EXISTING SANITARY DISCHARGE PIPE FROM EACH RESIDENCE AND CONNECT THE PROPOSED SANITARY LATERAL IN A SAFE LOCATION. AT NO TIME SHALL EXCAVATION OCCUR CLOSER THAN FIVE FEET FROM A STRUCTURE'S FOUNDATION. BASED ON EXISTING PIPE DEPTH, CONTRACTOR MAY ADJUST CLEANOUT INVERT AT THE MAIN BY MAINTAINING A MINIMUM OF 3.5' OF COVER AND 2% SLOPE ON PIPE LATERAL. IF THERE IS NO EXITING RESIDENCE, THEN LATERAL SHALL BE INSTALLED AT MAXIMUM DEPTH PER THE PLAN.

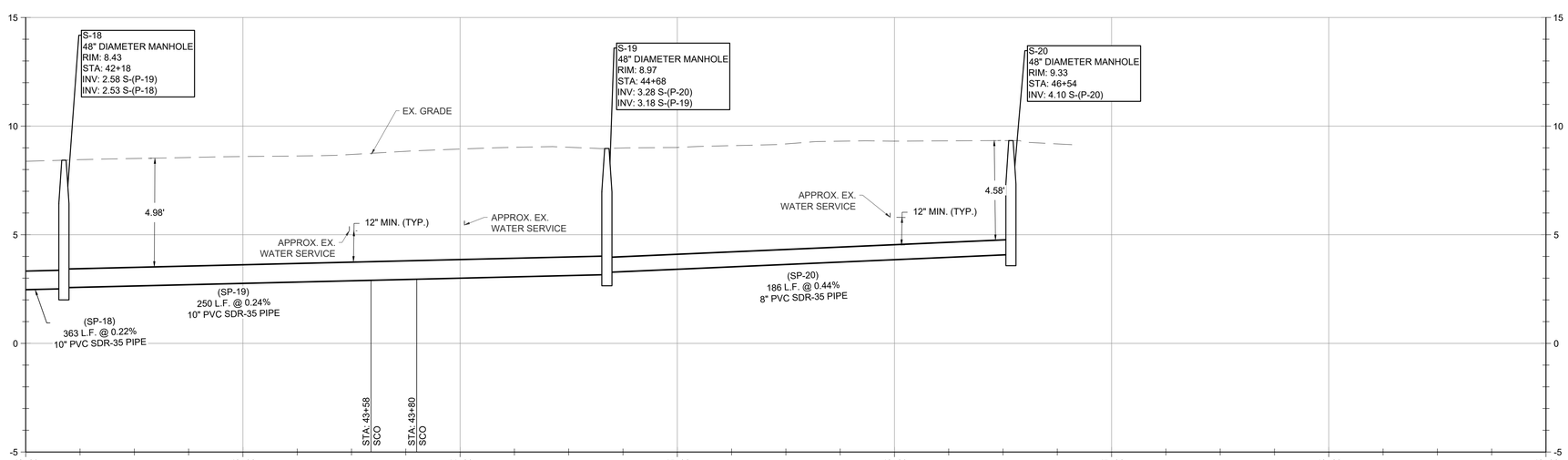

GRAVITY SEWER PROFILE VI - STA: 42+00 TO 47+42
HORIZONTAL SCALE: 1" = 30'
VERTICAL SCALE: 1" = 3'

0 15' 30' 60'
GRAPHIC SCALE IN FEET

0 1.5' 3' 6'
GRAPHIC SCALE IN FEET

REVISIONS

NO.	DATE	BY	DESCRIPTION
1	2024/09/25	NWH	REVISED PER USDA COMMENTS

DESIGN INFORMATION

DESIGNED BY:	SCL/NVH
DRAWN BY:	SCL/NVH
CHECKED BY:	AS/DOK
PROJECT MANAGER:	SCL

PROFESSIONAL CERTIFICATION. I HEREBY CERTIFY THAT THESE DOCUMENTS WERE PREPARED OR APPROVED BY ME, AND THAT I AM A DULY LICENSED PROFESSIONAL ENGINEER UNDER THE LAWS OF THE STATE OF MARYLAND, LICENSE NO. 55422
EXPIRATION DATE: DECEMBER 16, 2023

SEAL

STATE OF MARYLAND
STEVEN C. LEWISTERS
55422
PROFESSIONAL ENGINEER
09/05/23

WORCESTER COUNTY DEPARTMENT OF PUBLIC WORKS
LEWIS ROAD GRAVITY SEWER SYSTEM AND PUMP STATION

WORCESTER COUNTY, MARYLAND

GRAVITY SEWER PLAN AND PROFILE SHEET VI

EA Engineering, Science, and Technology, Inc., PBC
11200 Racetrack Road, Unit A101
Ocean Pines, Maryland 21811
(410) 641-5341
www.eaest.com

AS SHOWN

FULL SIZE PLOT: 24" x 36"

DATE: SEPTEMBER 2023

PROJECT NUMBER: 6250909

C-206

SHEET: 8 OF 22

100% PLANS - NOT FOR CONSTRUCTION

FILE PATH: \\OCEANPINES\PROJECTS\DOCS\WORCESTER COUNTY\6250909 - LEWIS ROAD SEWER CONNECTION\CAD\PRODUCTION\DESIGN SETIC\201 PLAN AND PROFILES.DWG [C-206] LEWISTERS, STEVEN 10/24/2024 12:05 PM

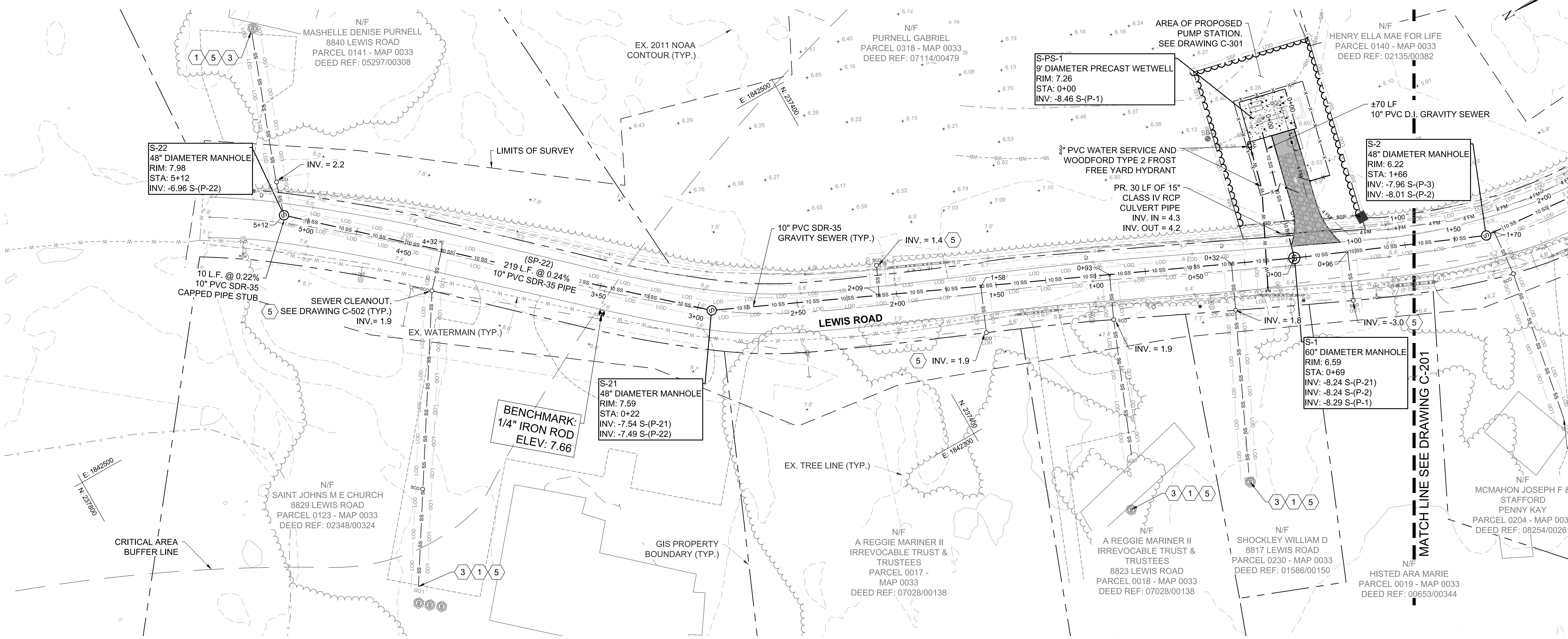

GRAVITY SEWER PLAN VII - STA: 0+00 TO 5+05
SCALE: 1" = 30'

NOTES:

1. SEPTIC SYSTEMS SHOWN ON THIS PLAN ARE BASED ON HISTORICAL COUNTY RECORDS. THE LOCATIONS ARE FOR THE CONTRACTOR'S GUIDANCE OF ASSUMED LOCATIONS AND SHALL NOT BE CONSIDERED ACCURATE OR COMPREHENSIVE BY THE CONTRACTOR. IT IS THE CONTRACTOR'S RESPONSIBILITY TO LOCATE ALL SEPTIC TANKS AND RECEIVING FIELDS AND ABANDON PER PLAN, COUNTY, AND STAE REQUIREMENTS.
2. FOR ALL LEWIS ROAD CULVERT CROSSINGS, CONTRACTOR SHALL SETUP BYPASS PUMPING, HOSE, & DISCHARGE THROUGH A FILTER BAG PRIOR TO THE REMOVAL OF STORM DRAIN PIPE. CONTRACTOR SHALL REPLACE PORTIONS OF STORM DRAIN PIPE IN KIND.
3. THE CONTRACTOR SHALL PERFORM THE DISCONNECTION AND ABANDONMENT OF EXISTING SEPTIC FIELDS AND SEPTIC TANKS BY AN LICENSED CONTRACTOR FOR SEPTIC WORK. UPON CONNECTION OF RESIDENTS TO PUBLIC SANITARY SEWER SYSTEM, THE CONTRACTOR SHALL PUMP OUT SEPTIC TANKS AND DISTRIBUTION BOXES, CAP INCOMING AND OUTGOING PIPES, CRUSH THE TOP SLAB, AND BREAK THE BOTTOM OF THE TANK TO ALLOW THE PASSAGE OF WATER THROUGH THE STRUCTURE. CRUSHED CONCRETE SHALL BE PLACED WITHIN THE STRUCTURES AND THEN BACKFILLED WITH CLEAN SAND AND COMPACTED.
4. THE CONTRACTOR SHALL COORDINATE WITH AND OBTAIN APPROVAL BY THE HOMEOWNER FOR ALL WORK BEING PERFORMED ON PRIVATE PROPERTY AND DURING CONNECTION OF PROPOSED LATERALS TO EXISTING PIPING OUTSIDE OF THE RESIDENCE
5. CONTRACTOR SHALL LOCATE THE EXISTING SANITARY DISCHARGE PIPE FROM EACH RESIDENCE AND CONNECT THE PROPOSED SANITARY LATERAL IN A SAFE LOCATION. AT NO TIME SHALL EXCAVATION OCCUR CLOSER THAN FIVE FEET FROM A STRUCTURE'S FOUNDATION. BASED ON EXISTING PIPE DEPTH, CONTRACTOR MAY ADJUST CLEANOUT INVERT AT THE MAIN BY MAINTAINING A MINIMUM OF 3.5' OF COVER AND 2% SLOPE ON PIPE LATERAL. IF THERE IS NO EXITING RESIDENCE, THEN LATERAL SHALL BE INSTALLED AT MAXIMUM DEPTH PER THE PLAN.

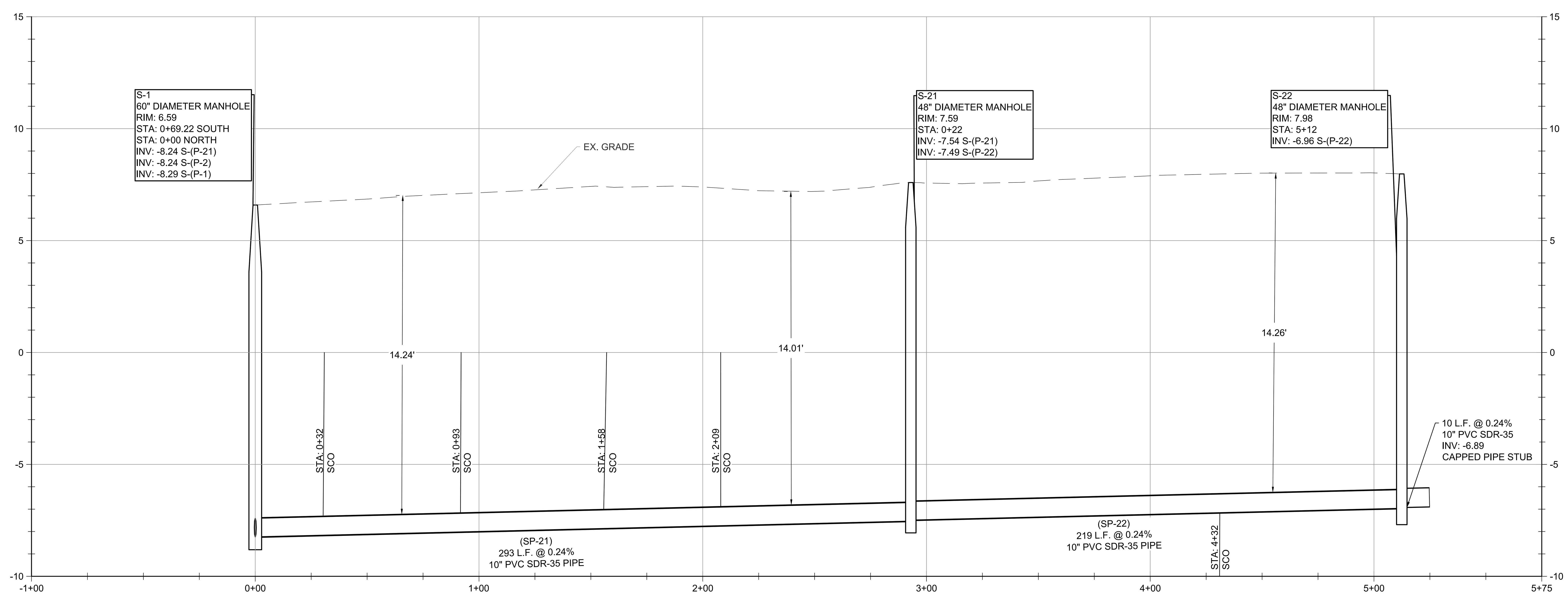

GRAVITY SEWER PROFILE VII - STA: 0+00 TO 5+05
HORIZONTAL SCALE: 1" = 30'
VERTICAL SCALE: 1" = 3'

GRAPHIC SCALE IN FEET (0, 15', 30', 60')
GRAPHIC SCALE IN FEET (0, 1.5', 3', 6')

FILE PATH: \\OCEANPINES\PROJECTS\DOCS\WORCESTER COUNTY\6250909 - LEWIS ROAD SEWER CONNECTION\CAD\PRODUCTION\DESIGN SET\C-201 PLAN AND PROFILES.DWG [C-207] LEMASTERS, STEVEN 10/24/2024 12:05 PM

NO.	DATE	BY	DESCRIPTION
1	2024/09/25	NWH	REVISED PER USDA COMMENTS

DESIGN INFORMATION
DESIGNED BY: SCL/NWH
DRAWN BY: SCL/NWH
CHECKED BY: AS/DOK
PROJECT MANAGER: SCL

PROFESSIONAL CERTIFICATION. I HEREBY CERTIFY THAT THESE DOCUMENTS WERE PREPARED OR APPROVED BY ME, AND THAT I AM A DULY LICENSED PROFESSIONAL ENGINEER UNDER THE LAWS OF THE STATE OF MARYLAND, LICENSE NO. 55422 EXPIRATION DATE: DECEMBER 16, 2023

SEAL: STATE OF MARYLAND — STEVEN C. LEMASTERS — 55422 — PROFESSIONAL ENGINEER — 09/05/23

WORCESTER COUNTY DEPARTMENT OF PUBLIC WORKS
LEWIS ROAD GRAVITY SEWER SYSTEM AND PUMP STATION

WORCESTER COUNTY, MARYLAND

GRAVITY SEWER PLAN AND PROFILE SHEET VII

EA Engineering, Science, and Technology, Inc., PBC
11200 Racetrack Road, Unit A101
Ocean Pines, Maryland 21811
(410) 641-5341
www.eaest.com

AS SHOWN

FULL SIZE PLOT: 24" x 36"
DATE: SEPTEMBER 2023
PROJECT NUMBER: 6250909

C-207

100% PLANS - NOT FOR CONSTRUCTION

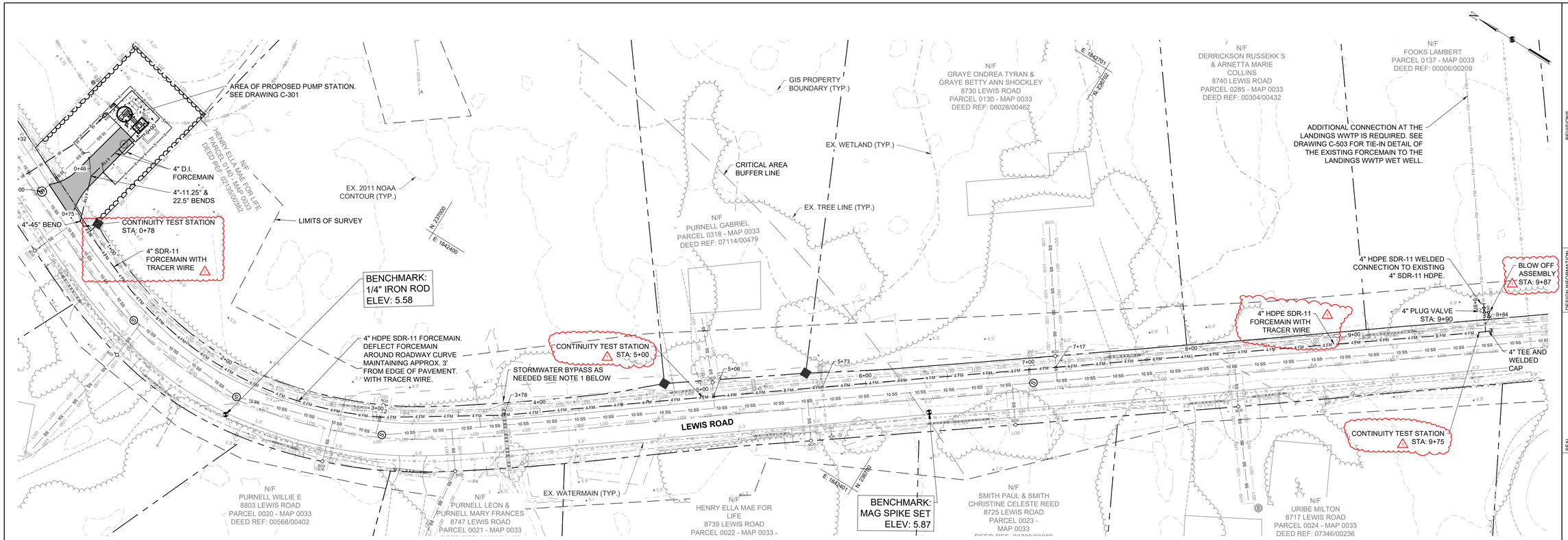

LEWIS ROAD FORCEMAIN PLAN - STA: 0+00 TO 10+50
HORIZONTAL SCALE: 1" = 30'

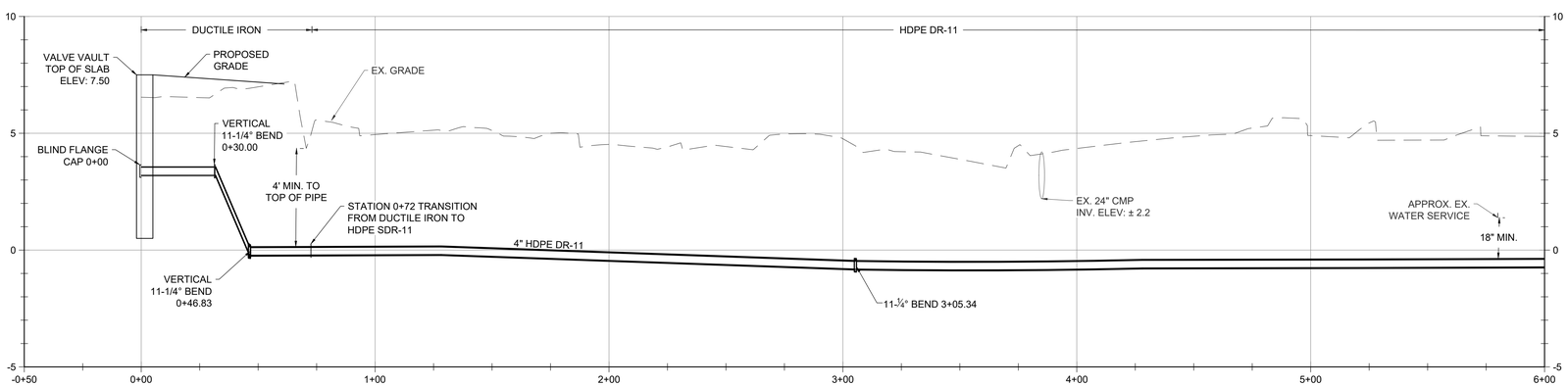

LEWIS ROAD FORCEMAIN PROFILE - STA: 0+00 TO 6+00
HORIZONTAL SCALE: 1" = 30'
VERTICAL SCALE: 1" = 3'

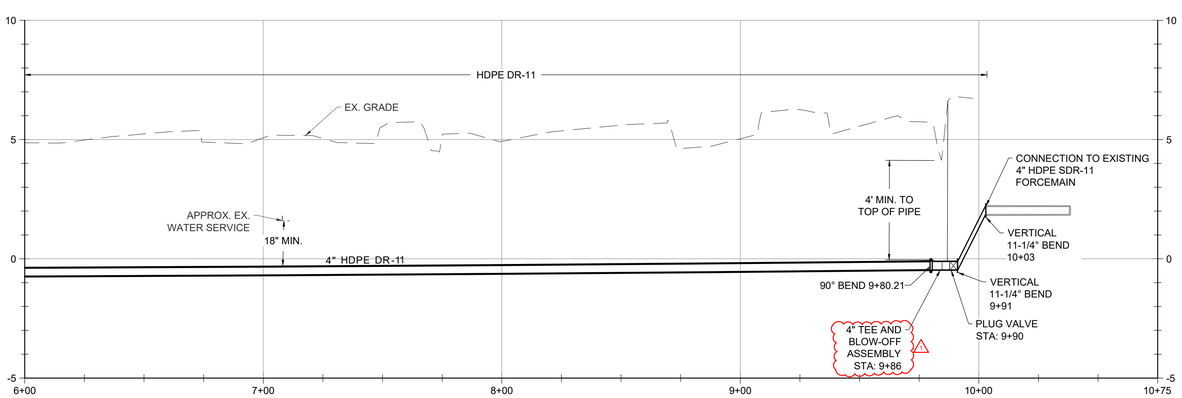

LEWIS ROAD FORCEMAIN PROFILE - STA: 0+00 TO 6+00
HORIZONTAL SCALE: 1" = 30'
VERTICAL SCALE: 1" = 3'

NOTES:

1. FOR ALL STORMWATER CROSSINGS CONTRACTOR SHALL SETUP BYPASS PUMPING, HOSE, & DISCHARGE THROUGH A FILTER BAG PRIOR TO THE REMOVAL OF STORM DRAIN PIPE. CONTRACTOR SHALL REPLACE PORTIONS OF STORM DRAIN PIPE IN KIND.
2. THE CONTRACTOR MAY ELECT TO INSTALL THE FORCEMAIN VIA OPEN CUT OR BY DIRECTIONAL DRILLING BASED ON SITE CONSTRAINTS AND PREFERENCE.

0 15' 30' 60'
GRAPHIC SCALE IN FEET

0 1.5' 3' 6'
GRAPHIC SCALE IN FEET

REVISIONS

NO.	DATE	BY	DESCRIPTION
1	2024/09/05	NHH	REVISED PER USDA COMMENTS

DESIGN INFORMATION

DESIGNED BY:	SCL/NVH
DRAWN BY:	SCL/NVH
CHECKED BY:	AS/DOK
PROJECT MANAGER:	SCL

PROFESSIONAL CERTIFICATION. I HEREBY CERTIFY THAT THESE DOCUMENTS WERE PREPARED OR APPROVED BY ME, AND THAT I AM A DULY LICENSED PROFESSIONAL ENGINEER UNDER THE LAWS OF THE STATE OF MARYLAND, LICENSE NO. 55422 EXPIRATION DATE: DECEMBER 16, 2023

SEAL

STATE OF MARYLAND STEVEN C. LEMASTERS 55422 PROFESSIONAL ENGINEER 09/05/23

WORCESTER COUNTY DEPARTMENT OF PUBLIC WORKS
LEWIS ROAD GRAVITY SEWER SYSTEM AND PUMP STATION

WORCESTER COUNTY, MARYLAND

LEWIS ROAD FORCEMAIN PLAN AND PROFILE

EA Engineering, Science, and Technology, Inc., PBC
11200 Racetrack Road, Unit A101
Ocean Pines, Maryland 21811
(410) 641-5341
www.eaest.com

AS SHOWN

FULL SIZE PLOT: 24" x 36"

DATE: SEPTEMBER 2023

PROJECT NUMBER: 6250909

C-208

SHEET: 10 OF 22

100% PLANS - NOT FOR CONSTRUCTION

FILE PATH: \\OCEANPINES\PROJECTS\DOCS\WORCESTER COUNTY\6250909 - LEWIS ROAD SEWER CONNECTION\CAD\PRODUCTION\DESIGN\SETC\01 PLAN AND PROFILES.DWG [C-208] LEMASTERS, STEVEN 10/24/2024 12:06 PM

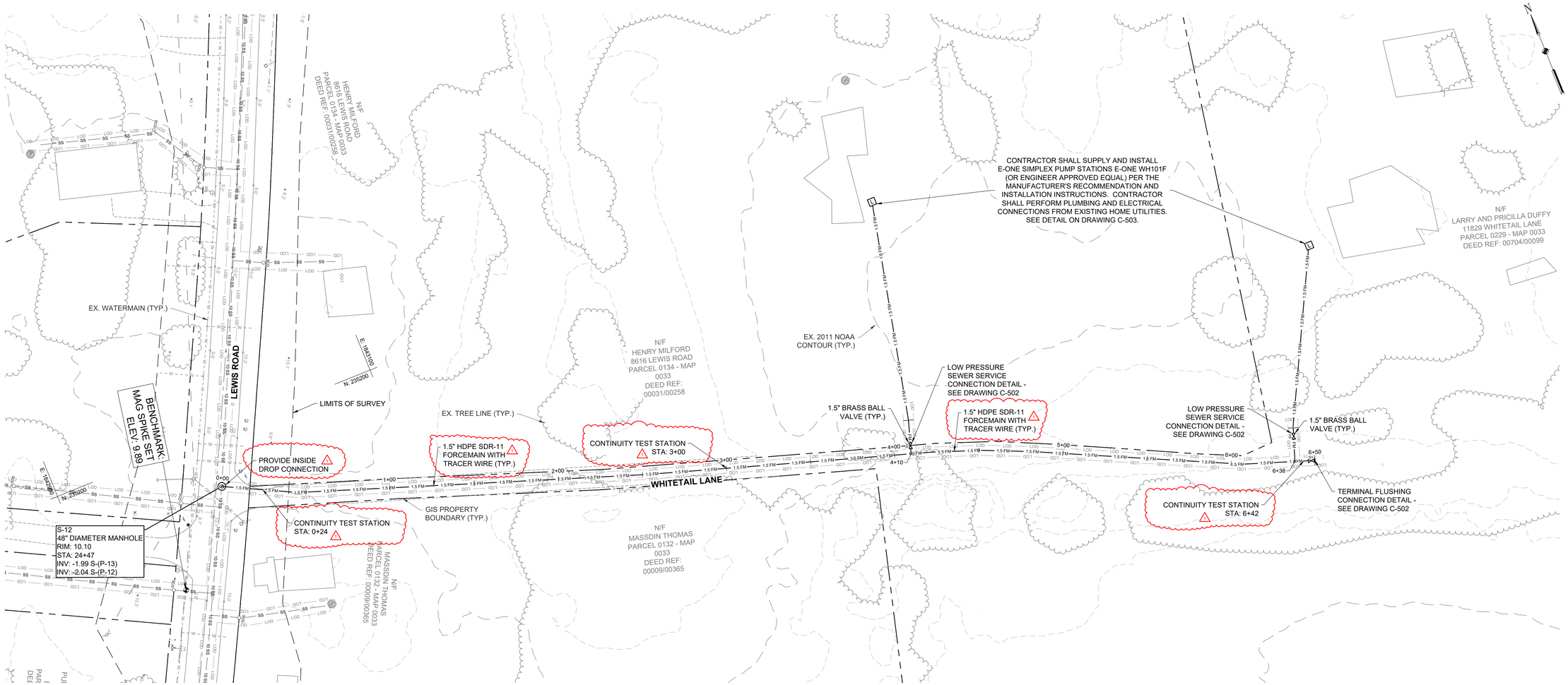

WHITETAIL LANE FORCEMAIN PLAN - STA: 0+00 TO 6+50
SCALE: 1" = 30'

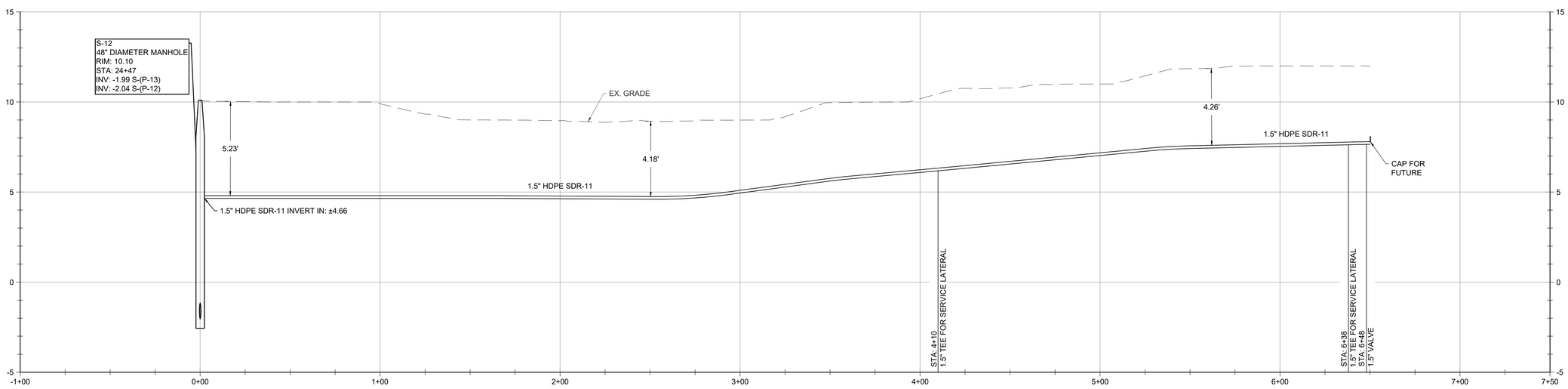

FORCEMAIN PROFILE - STA: 1+50 TO 9+59
HORIZONTAL SCALE: 1" = 30'
VERTICAL SCALE: 1" = 3'

0 15' 30' 60'
GRAPHIC SCALE IN FEET

0 1.5' 3' 6'
GRAPHIC SCALE IN FEET

REVISIONS

NO.	DATE	BY	DESCRIPTION
1	2024/09/25	NWH	REVISED PER USDA COMMENTS

DESIGN INFORMATION

DESIGNED BY:	SCL/NVH
DRAWN BY:	SCL/NVH
CHECKED BY:	AS/DOK
PROJECT MANAGER:	SCL

PROFESSIONAL CERTIFICATION. I HEREBY CERTIFY THAT THESE DOCUMENTS WERE PREPARED OR APPROVED BY ME, AND THAT I AM A DULY LICENSED PROFESSIONAL ENGINEER UNDER THE LAWS OF THE STATE OF MARYLAND, LICENSE NO. 55422 EXPIRATION DATE: DECEMBER 16, 2023

SEAL

STATE OF MARYLAND
STEVEN C. LEMASTERS
55422
PROFESSIONAL ENGINEER
09/05/23

WORCESTER COUNTY DEPARTMENT OF PUBLIC WORKS
LEWIS ROAD GRAVITY SEWER SYSTEM AND PUMP STATION

WORCESTER COUNTY, MARYLAND

WHITETAIL LANE FORCEMAIN PLAN AND PROFILE

EA Engineering, Science, and Technology, Inc., PBC
11200 Racetrack Road, Unit A101
Ocean Pines, Maryland 21811
(410) 641-5341
www.eaest.com

AS SHOWN

FULL SIZE PLOT: 24" x 36"

DATE: SEPTEMBER 2023

PROJECT NUMBER: 6250909

C-209

SHEET: 11 OF 22

100% PLANS - NOT FOR CONSTRUCTION

FILE PATH: \\DCSANPNESFPROJECTS\DOCS\WORCESTER COUNTY\6250909 - LEWIS ROAD SEWER CONNECTION\CAD\PRODUCTION\DESIGN SET\C-201 PLAN AND PROFILES.DWG [C-209] LEMASTERS, STEVEN 10/24/2024 12:06 PM

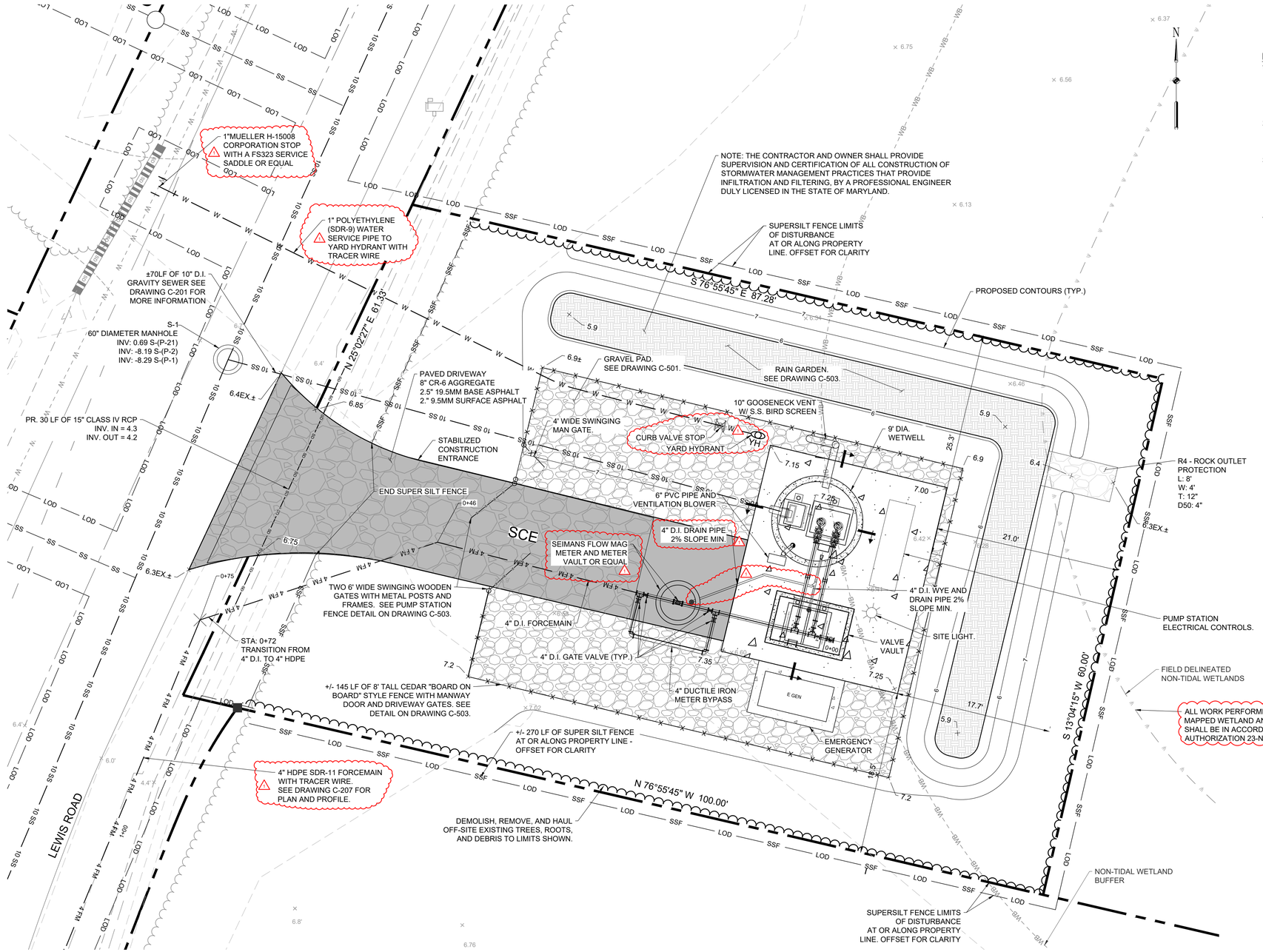

PUMP STATION SITE PLAN
SCALE: 1" = 6'

DESIGN DATA

1. PUMP DESIGN
   - 1.1. DESIGN FLOW: 300 GPD PER EDU (61 TOTAL EDU)
   - 1.2. PEAKING FACTOR: 4.0
   - 1.3. MINIMUM PEAK FLOW: 51 GPM
   - 1.4. DESIGN FLOW (MIN. VEL. IN EXISTING 4" FORCEMAIN) : 65-85 GPM
2. WET WELL DESIGN
   - 2.1. WORKING VOLUME: 1,089 GALLONS
   - 2.2. PUMP RUN: 13.6 MINUTES
3. FORCEMAIN DESIGN
   - 3.1. EXISTING 4" HDPE SDR-11 LENGTH: ±2,001 FEET
   - 3.2. PROPOSED 4" HDPE SDR-11 LENGTH: ± 1,003 FEET
   - 3.3. VELOCITY: 2.6 FPS
   - 3.4. HAZEN-WILLIAMS DESIGN ROUGHNESS COEFFICIENT (C): 120
4. DESIGN POINT
   - 4.1. 85 GPM @ 52.2 TDH

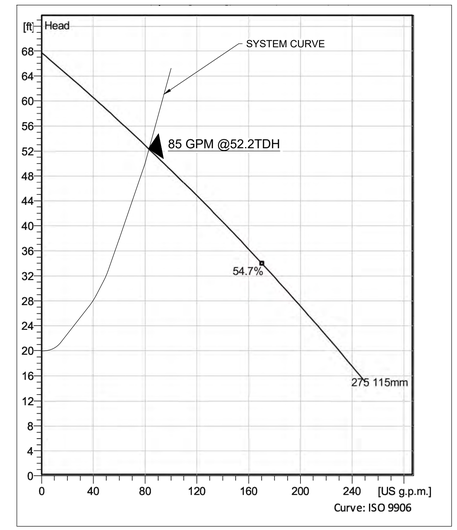

PUMP AND SYSTEM CURVE
FLYGT NP 3069 SH~3

GENERAL NOTE:

MANUFACTURERS AND EQUIPMENT MODEL NUMBERS IDENTIFIED WITH THE DRAWINGS AND/OR SPECIFICATIONS REPRESENT THE BASIS OF DESIGN. AS A PART OF THE SUBMITTAL PROCESS DETAILED IN THE SPECIFICATIONS, THE CONTRACTOR MAY SUBMIT IN WRITING TO THE OWNER AND ENGINEER REQUESTS FOR APPROVED EQUALS.

REVISIONS			
NO.	DATE	BY	DESCRIPTION
1	2024/09/05	NWH	REVISED PER USDA COMMENTS

DESIGN INFORMATION

DESIGNED BY:	DRAWN BY:	CHECKED BY:	PROJECT MANAGER:
SCL/NWH	SCL/NWH	AS/DOK	SCL

PROFESSIONAL CERTIFICATION. I HEREBY CERTIFY THAT THESE DOCUMENTS WERE PREPARED OR APPROVED BY ME, AND THAT I AM A DULY LICENSED PROFESSIONAL ENGINEER UNDER THE LAWS OF THE STATE OF MARYLAND, LICENSE NO. 55422
EXPIRATION DATE: DECEMBER 16, 2023

SEAL: STATE OF MARYLAND · STEVEN C. LEWISTER · 55422 · PROFESSIONAL ENGINEER · 09/05/23

WORCESTER COUNTY DEPARTMENT OF PUBLIC WORKS
LEWIS ROAD GRAVITY SEWER SYSTEM AND PUMP STATION

WORCESTER COUNTY, MARYLAND

EROSION & SEDIMENT CONTROL AND PUMP STATION SITE PLAN

EA Engineering, Science, and Technology, Inc., PBC
11200 Racetrack Road, Unit A101
Ocean Pines, Maryland 21811
(410) 641-5341
www.eaest.com

0 3' 6' 12'
GRAPHIC SCALE IN FEET

FULL SIZE PLOT: 24" x 36"
DATE: SEPTEMBER 2023
PROJECT NUMBER: 6250909

C-301
SHEET: 12 OF 22

100% PLANS - NOT FOR CONSTRUCTION

FILE PATH: \\DCSDAPINES\PROJECTS\DOCS\WORCESTER COUNTY\6250909 - LEWIS ROAD SEWER CONNECTION\CAD\PRODUCTION\DESIGN SET\C-301 PUMP STATION PLANS.DWG [C-301] LEMASTERS, STEVEN 10/24/2024 12:07 PM

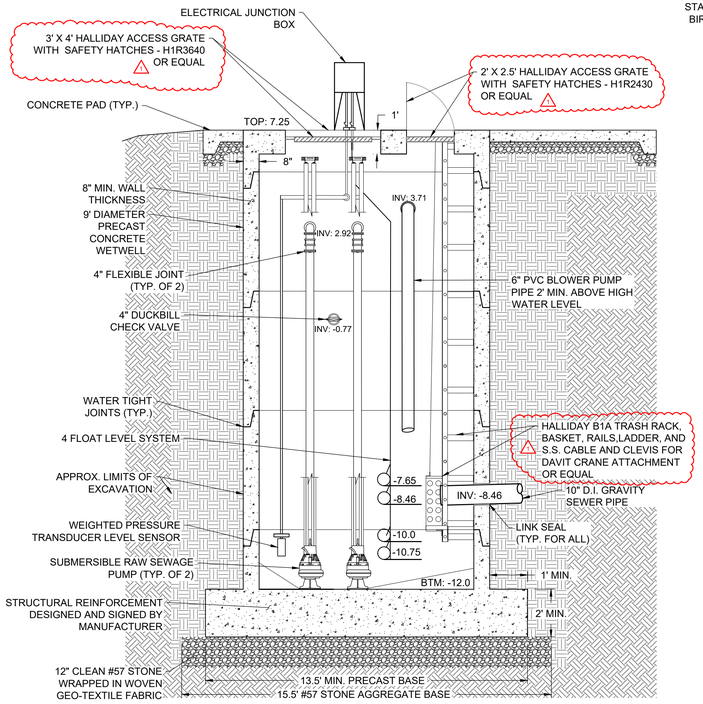

PUMP STATION SECTION A - A'

SCALE: 1" = 4'

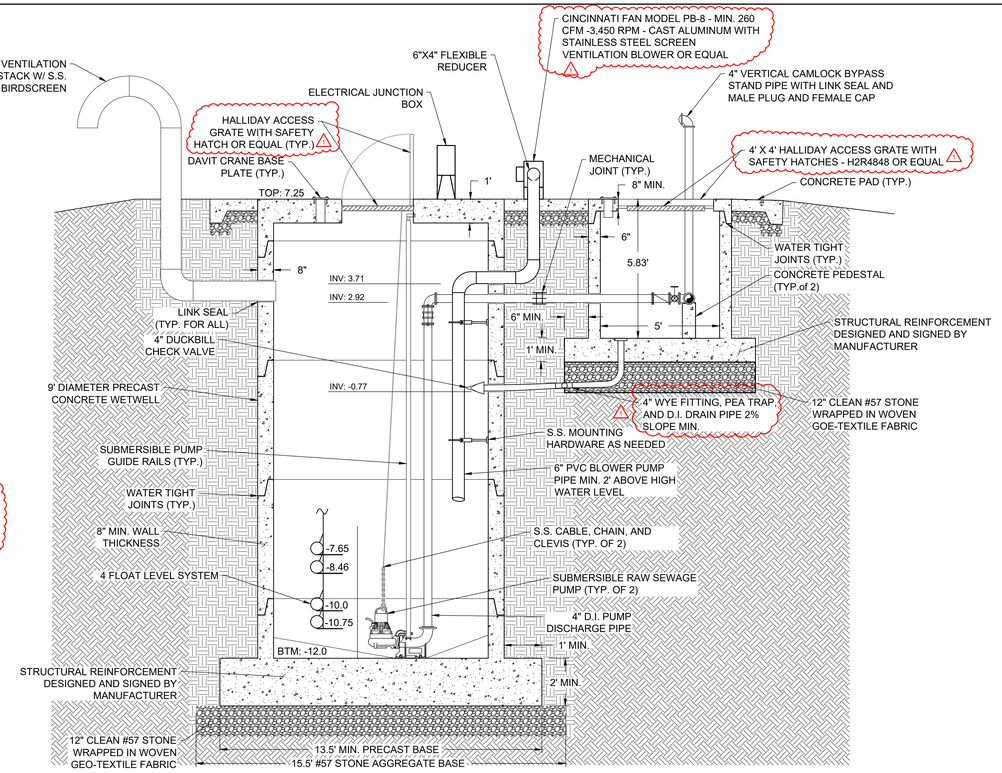

PUMP STATION SECTION B - B'

SCALE: 1" = 4'

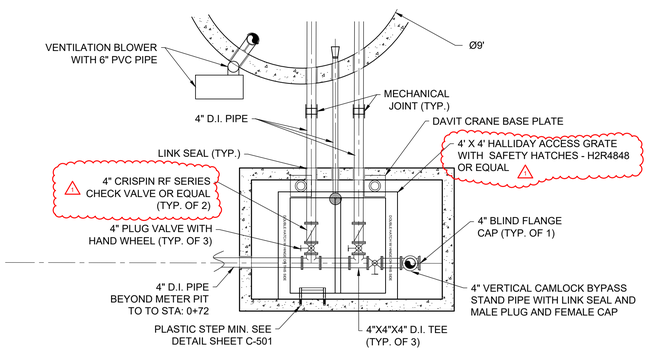

VALVE VAULT PIPING PLAN DETAIL

SCALE: 1" = 4'

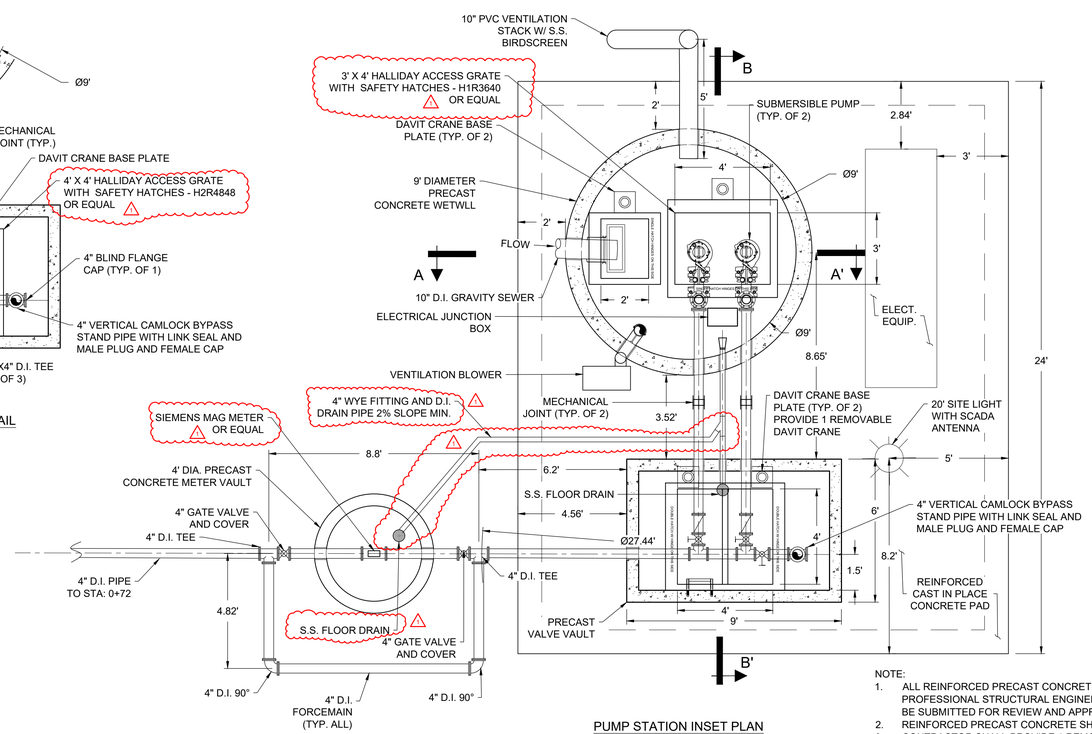

PUMP STATION INSET PLAN

SCALE: 1" = 4'

GENERAL NOTE:

MANUFACTURERS AND EQUIPMENT MODEL NUMBERS IDENTIFIED WITH THE DRAWINGS AND/OR SPECIFICATIONS REPRESENT THE BASIS OF DESIGN. AS A PART OF THE SUBMITTAL PROCESS DETAILED IN THE SPECIFICATIONS, THE CONTRACTOR MAY SUBMIT IN WRITING TO THE OWNER AND ENGINEER REQUESTS FOR APPROVED EQUALS.

NOTE:

1. ALL REINFORCED PRECAST CONCRETE SHALL BE ENGINEERED BY THE MANUFACTURER AND SIGNED BY A PROFESSIONAL STRUCTURAL ENGINEER IN THE STATE OF MARYLAND. DESIGN AND CALCULATIONS SHALL BE SUBMITTED FOR REVIEW AND APPROVAL.
2. REINFORCED PRECAST CONCRETE SHALL MEET THE STANDARDS FOR H20 LOADING.
3. CONTRACTOR SHALL PROVIDE 1 REMOVABLE DAVIT CRANE, WITH MINIMUM SPECIFIED WEIGHT CAPACITY OF 2 TIMES THE PUMP WEIGHT.
4. CINCINNATI FAN (OR EQUAL) MODEL PB-8 CAST ALUMINUM, 7" WHEEL, 3,450 RMP, MIN. 250 CFM VENTILATION BLOWER SHALL BE CAPABLE OF MEETING THE STATE REQUIREMENTS OF CONTINUOUS FLOW PROVIDING 12 AIR CHANGES PER HOUR. BLOWER SHALL ALSO BE CONNECTED TO A HATCH LIMIT SWITCH THAT WILL TURN ON THE VENTILATION BLOWER ON WHEN HATCH IS OPENED.

REVISIONS

NO.	DATE	BY	DESCRIPTION
1	2024/08/05	NHH	REVISED PER USDA COMMENTS

DESIGN INFORMATION

DESIGNED BY: SCL/NVH
DRAWN BY: SCL/NVH
CHECKED BY: AS/DOK
PROJECT MANAGER: SCL

PROFESSIONAL CERTIFICATION. I HEREBY CERTIFY THAT THESE DOCUMENTS WERE PREPARED OR APPROVED BY ME, AND THAT I AM A DULY LICENSED PROFESSIONAL ENGINEER UNDER THE LAWS OF THE STATE OF MARYLAND, LICENSE NO. 55422 EXPIRATION DATE: DECEMBER 16, 2023

SEAL

STATE OF MARYLAND — STEVEN C. LEMASTERS — 55422 — PROFESSIONAL ENGINEER — 09/05/23

WORCESTER COUNTY DEPARTMENT OF PUBLIC WORKS
LEWIS ROAD GRAVITY SEWER SYSTEM AND PUMP STATION

WORCESTER COUNTY, MARYLAND

PUMP STATION SECTION AND DETAILS

EA Engineering, Science, and Technology, Inc., PBC
11200 Racetrack Road, Unit A101
Ocean Pines, Maryland 21811
(410) 641-5341
www.eaest.com

0 1.5' 3' 6'
GRAPHIC SCALE IN FEET

FULL SIZE PLOT: 24" x 36"

DATE: SEPTEMBER 2023

PROJECT NUMBER: 6250909

C-302

SHEET: 13 OF 22

100% PLANS - NOT FOR CONSTRUCTION

FILE PATH: \\DCSANPNESPROJECTS\DOCS\WORCESTER COUNTY\6250909 - LEWIS ROAD SEWER CONNECTION\CAD\PRODUCTION\DESIGN SETIC-301 PUMP STATION PLANS.DWG [C-302] LEMASTERS, STEVEN 10/04/2024 12:07 PM

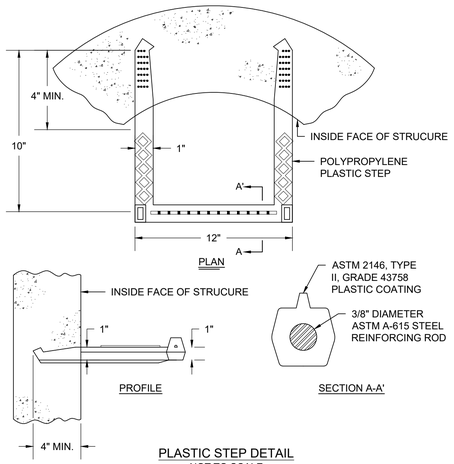

PLASTIC STEP DETAIL
NOT TO SCALE

NOTES
1. STEPS SHALL BE PRECAST IN PLACE DURING MANUFACTURING.

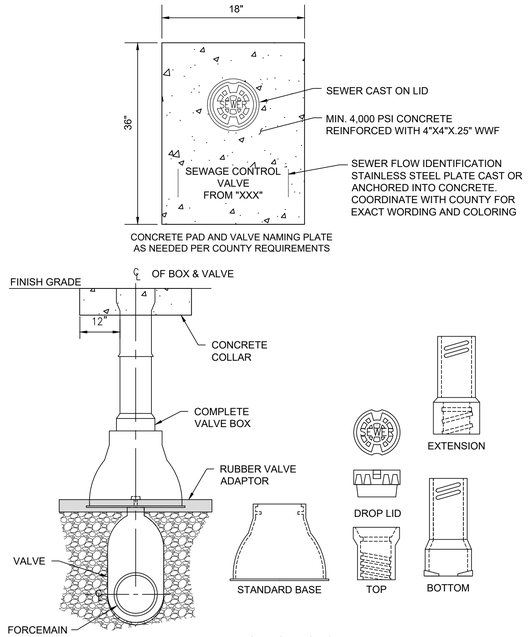

VALVE BOX FOR FORCEMAIN DETAIL
NOT TO SCALE

NOTES:
1. VALVE BOX BASES SHALL BE INSTALLED SO THAT VALVE BOX CAN NOT TRANSFER LOADS TO VALVES.
2. VALVE BOX SHALL BE ADJUSTED TO FINISHED GRADE TO ALLOW FUTURE 6" ADJUSTMENT UP OR DOWN.
3. VALVE BOXES SHALL BE CAST IRON SCREW TYPE.

DIAMETER (d) OF PIPE		6" OR LESS	8"	12" OR GREATER
HOR. ANGLE: FROM 10° TO 45°	A:	0.75 FT	1.0 FT	1.5 FT
HOR. ANGLE: FROM 46° TO 90°	A:	1.0 FT	1.5 FT	2.0 FT
TEE CONNECTION:	A:	1.5 FT	1.75 FT	2.5 FT
VERTICAL BEND #5 BAR:	A: B:	2.0 FT 1.5 FT	3.0 FT 2.0 FT	4.0 FT 3.0 FT
PLUG OR CAP	A:	1.25 FT	1.5 FT	2.5 FT

1) ALL HORIZONTAL BENDS SHALL HAVE CONCRETE THRUST BLOCKS WITH MINIMUM BEARING AREAS AGAINST UNDISTURBED SOIL, AS SHOWN IN THIS DRAWING.
2) BEARING AREAS ARE BASED UPON UNDISTURBED SOIL WITH A MININUM BEARING CAPACITY OF 0.5 TONS PER SQUARE FOOT. FOR LESSER SOIL CAPACITY, THESE AREAS SHALL BE INCREASED ACCORDINGLY.
3) THRUST BLOCKS SHALL BE POURED DIRECTLY AGAINST TRENCH WALLS.
4) NO JOINT SHALL BE COVERED WITH CONCRETE.
5) CONCRETE SHALL BE OF A MINIMUM OF 2500 P.S.I. STRENGTH.

Worcester County Department of Public Works Water & Wastewater Division	THRUST BLOCKS AND VERTICAL BEND ANCHORAGE	DETAIL No. W-4 Date NOV. 7, 2017

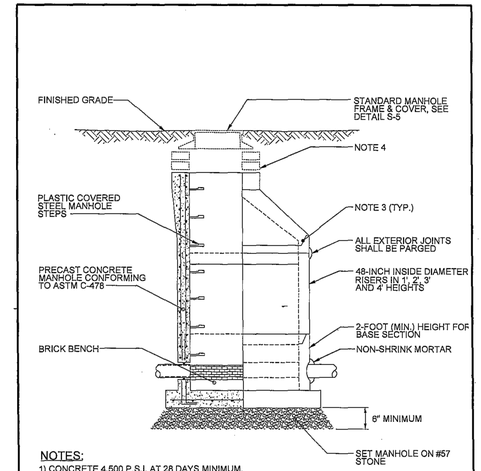

NOTES;
1) CONCRETE 4,500 P.S.I. AT 28 DAYS MINIMUM.
2) MANHOLE SHALL CONFORM TO ASTM C-478.
3) "O-RING" JOINTS MEET ASTM C-443.
4) MINIMUM TWO BRICK AND MORTAR COURSES OR GRADE ADJUSTMENT RINGS AS REQUIRED 2', 3', 4' & 6', PERMITTED.

Worcester County Department of Public Works Water & Wastewater Division	STANDARD 48" I.D. PRECAST MANHOLE	DETAIL No. S-1 Date NOV. 7, 2017

NOTES
1. WATERPROOF COATING SHALL BE APPLIED TO ALL EXTERIOR SURFACES PER MDOT STANDARDS.
2. ADD COLLECTOR AND DROP PIPE FOR INFLOW IN FROM GREATER THAN 3' ABOVE FLOOR ELEVATION.
3. MANHOLE INSERTS SHALL BE PROVIDED WITH LIFTING STRAPS AND VALVE

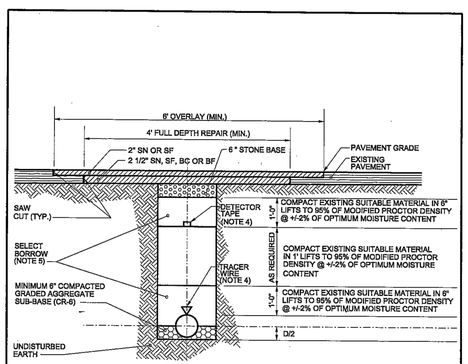

NOTES:
1) PAVEMENT REPAIR SHALL BE PERFORMED TO THE SATISFACTION OF WORCESTER COUNTY AND THE ENGINEER.
2) CONTRACTOR SHALL MEET ON-SITE WITH WORCESTER COUNTY DEPARTMENT OF PUBLIC WORKS, ROADS DIVISION AND THE ENGINEER PRIOR TO PERFORMING ANY WORK ON COUNTY ROADS.
3) ALL BACKFILL AND COMPACTION SHALL BE PERFORMED ONLY IN THE PRESENCE OF THE ENGINEER OR A REPRESENTATIVE OF THE WORCESTER COUNTY DEPARTMENT OF PUBLIC WORKS, ROADS DIVISION.
4) DETECTOR TAPE WILL BE PROVIDED FOR WATER, LP SEWER AND GRAVITY SEWER PIPE. TRACER WIRE WILL BE PROVIDED FOR WATER AND LP SEWER.
5) SELECT BORROW REQUIRED FOR ROAD LOCATIONS, AASHTO A3 OR BETTER.

* MANHOLE S-1 SHALL BE CONSTRUCTED AS A 60" INSIDE DIAMETER. FABRICATOR SHALL SUBMIT DESIGN FOR H-25 LOADING FOR REVIEW AND APPROVAL

Worcester County Department of Public Works Water & Wastewater Division	TRENCH PAVEMENT REPAIR DETAIL	DETAIL No. G-2 Date NOV. 7, 2017

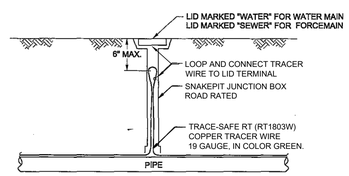

Worcester County Department of Public Works Water & Wastewater Division	CONTINUITY TEST STATION	DETAIL No. W-1 Date NOV. 7, 2017

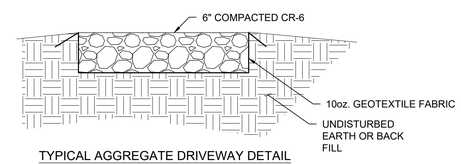

TYPICAL AGGREGATE DRIVEWAY DETAIL
(FOR AREAS NOT PAVED WITHIN THE PUMP STATION LOCATION)
NOT TO SCALE

NOTES:
1. AREAS THAT REQUIRE FILL SHALL USE SUITABLE MATERIAL AND BE COMPACTED TO 95% MODIFIED PROCTOR.

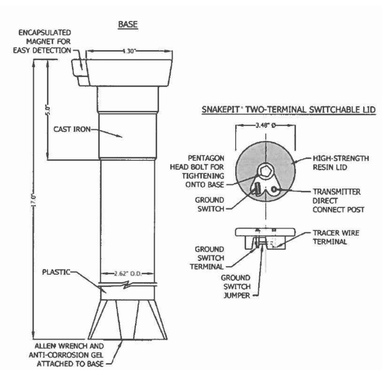

TRACER WIRE JUNCTION BOX
SNAKEPIT (OR EQUAL)ROAD RATED DETAIL
NOT TO SCALE

NOTES:
1. BOXES SHALL BE SNAKEPIT (OR EQUAL) JUNCTION BOX, ROAD RATED, AND BE PLACED NOT TO EXCEED 1,000 LINEAR FEET OF WIRE LENGTH APART.

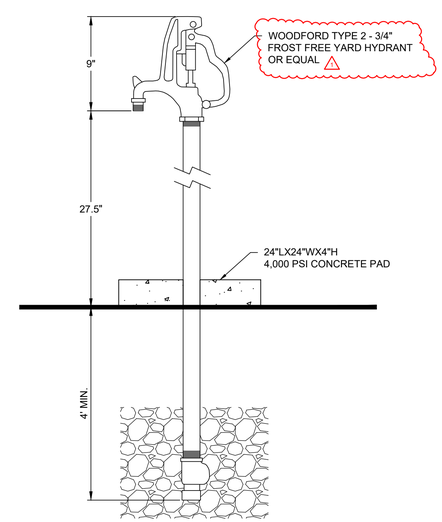

FROST FREE YARD HYDRANT DETAIL
NOT TO SCALE

GENERAL NOTE:

MANUFACTURERS AND EQUIPMENT MODEL NUMBERS IDENTIFIED WITH THE DRAWINGS AND/OR SPECIFICATIONS REPRESENT THE BASIS OF DESIGN. AS A PART OF THE SUBMITTAL PROCESS DETAILED IN THE SPECIFICATIONS, THE CONTRACTOR MAY SUBMIT IN WRITING TO THE OWNER AND ENGINEER REQUESTS FOR APPROVED EQUALS.

ADDITIONAL NOTES:
1. CONTRACTOR MAY USE EXCAVATED MATERIAL IF IN ACCORDANCE WITH THE SPECIFICATIONS OR AS APPROVED BY THE ENGINEER.
2. FOR ANY PIPE WITHIN THE WATER TABLE THE PIPE SHALL BE PLACED A 6" THICK #67 STONE STONE BED UNDERLAID WITH WOVEN FABRIC AND PLACED TO THE HAUNCHES OF THE PIPE.
3. PROVIDE MINIMUM 18 INCHES SEPARATION BETWEEN UTILITIES.
4. PROVIDE 19 GAUGE TRACE SAFE RT (OR EQUAL) TRACER WIRE (RT1803U) FOR ALL NON-METALLIC PIPES OTHER THAN GRAVITY SEWER AND STORMWATER PIPE. WIRE SHALL BE WRAPPED AROUND PIPE AND CONTINUOUS. ANTI PULL - FINER TRAP STYLE CONNECTORS SHALL BE USED TO CONNECT ROLLS TOGETHER. WIRE SHALL BE GREEN IN COLOR AND COPPER SOLID WIRE,19 GAUGE WITH POLYETHYLENE INSULATION. WIRE TERMINATION BOXES SHALL BE PLACED AT INTERVALS COORDINATE WITH COUNTY FOR EXACT LOCATIONS. BOXES SHALL SNAKEPIT (OR EQUAL) JUNCTION BOX ROAD RATED AND BE PLACED NOT EXCEED 1,000LF APART.
5. 3" WIDE METALLIC WARNING DETECTOR TAPE BLUE IN COLOR - STATING "WATER" AND BROWN IN COLOR - STATING "FORCEMAIN" AND GREEN IN COLOR STATING "SEWER" PLACE 1'-6" ABOVE TOP OF PIPE.

REVISIONS

NO.	DATE	BY	DESCRIPTION
1	2024/09/25	NHH	REVISED PER USDA COMMENTS

DESIGN INFORMATION

DESIGNED BY:	DRAWN BY:	CHECKED BY:	PROJECT MANAGER:
SCL/NVH	SCL/NVH	AS/DOK	SCL

PROFESSIONAL CERTIFICATION. I HEREBY CERTIFY THAT THESE DOCUMENTS WERE PREPARED OR APPROVED BY ME, AND THAT I AM A DULY LICENSED PROFESSIONAL ENGINEER UNDER THE LAWS OF THE STATE OF MARYLAND, LICENSE NO. 55422 EXPIRATION DATE: DECEMBER 16, 2023

SEAL: STATE OF MARYLAND · STEVEN C. LEMASTERS · 55422 · PROFESSIONAL ENGINEER · 09/05/23

WORCESTER COUNTY DEPARTMENT OF PUBLIC WORKS
LEWIS ROAD GRAVITY SEWER SYSTEM AND PUMP STATION
WORCESTER COUNTY, MARYLAND
DETAIL SHEET I

EA Engineering, Science, and Technology, Inc., PBC
11200 Racetrack Road, Unit A101
Ocean Pines, Maryland 21811
(410) 641-5341
www.eaest.com

SCALE AS SHOWN

FULL SIZE PLOT: 24" x 36"

DATE: SEPTEMBER 2023

PROJECT NUMBER: 6250909

C-501

SHEET: 14 OF 22

100% PLANS - NOT FOR CONSTRUCTION

FILE PATH: \\OCEANPINE\PROJECTS\DOCS\WORCESTER COUNTY\6250909 - LEWIS ROAD SEWER CONNECTION\CAD\PRODUCTION\DESIGN SET\C-501 DETAIL SHEETS.DWG [C-501] LEMASTERS, STEVEN 10/24/2024 12:07 PM

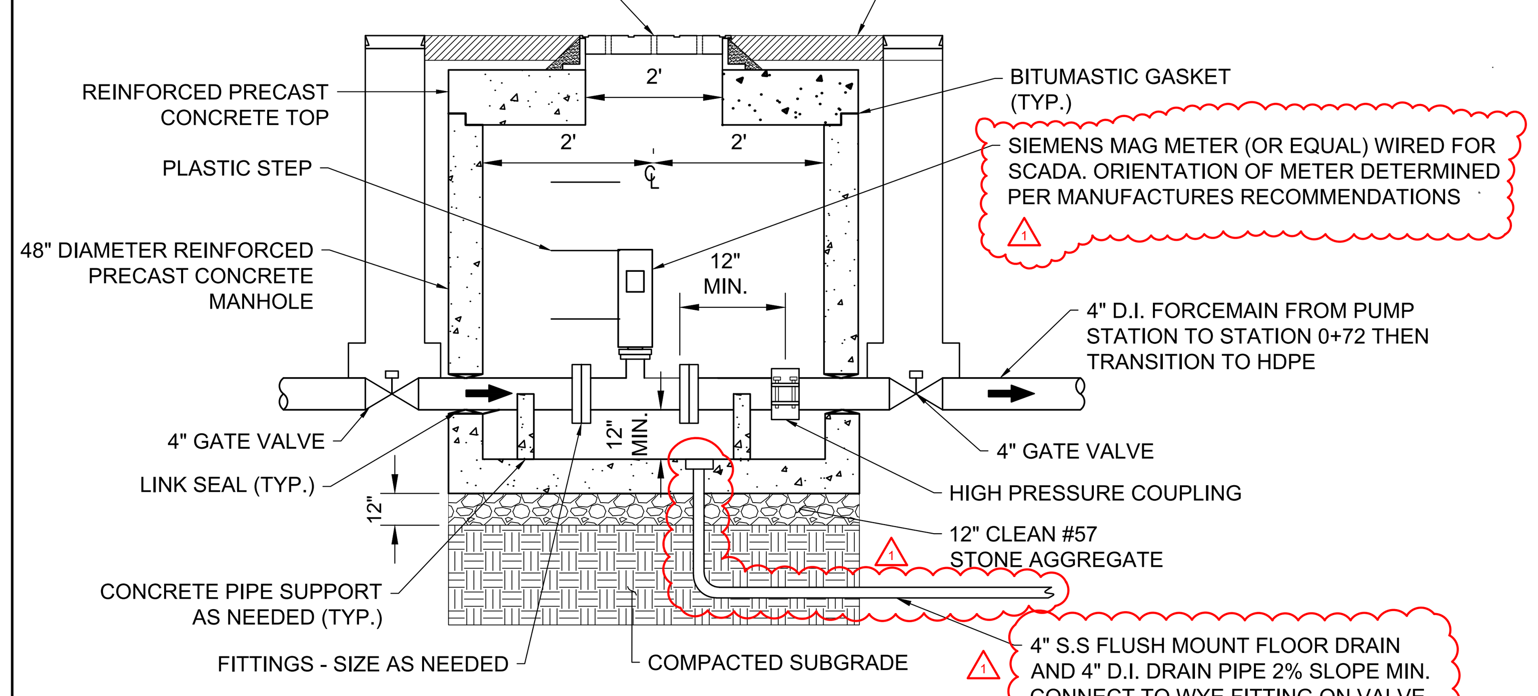

FLOW METER AND VAULT DETAIL
NOT TO SCALE

NOTES:

1. MANHOLE SHALL BE H-20 LOAD RATED AND REINFORCEMENT THE DESIGN SHALL BE PROVIDED BY MANUFACTURER.
2. MANHOLE STEPS SHALL BE MINIMUM 12" WIDE AND SPACED 12" WITH ±1" TOLERANCE, CENTER TO CENTER, VERTICAL ALIGNMENT.
3. EMBED STEPS MINIMUM 3" WITH A MINIMUM PROJECTION OF 5".
4. PROVIDE LIFTING HOLES OR DEVICES FOR ALL PRECAST SECTIONS. HOLES COMPLETELY THRU WALLS SHALL BE PLUGGED W/NEOPRENE OR RUBBER PLUG INSERTS, MORTARED FLUSH ON EACH SIDE OF WALL WITH NON-SHRINK GROUT. HOLES NOT COMPLETELY THROUGH WALL SHALL BE FILLED FLUSH WITH NON-SHRINK GROUT.
5. SUPPORT VALVES WITH RUBBER VALVE ADAPTOR.

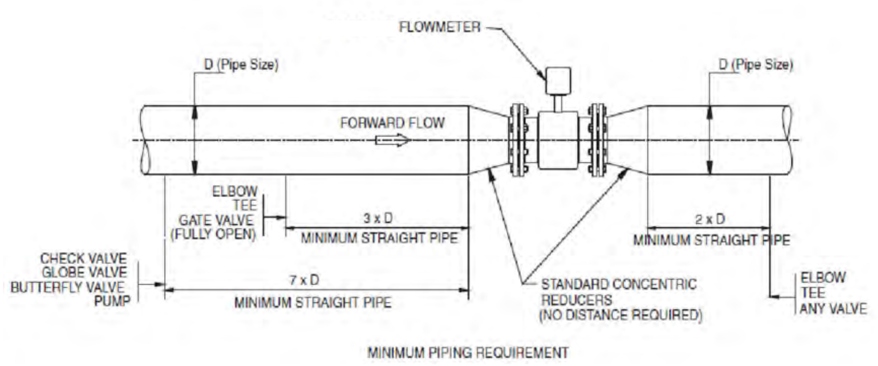

MINIMUM PIPING REQUIREMENT

WHERE LOW PRESSURE SANITARY FORCEMAIN ENTERS THE DROP MANHOLE, THE CONTRACTOR SHALL INSTALL A 90° BEND ON FORCEMAIN AND ENSURE DISCHARGE ENTERS INTO THE VERTICAL DROP WITHIN 'RECLINER' DROP BOWL.

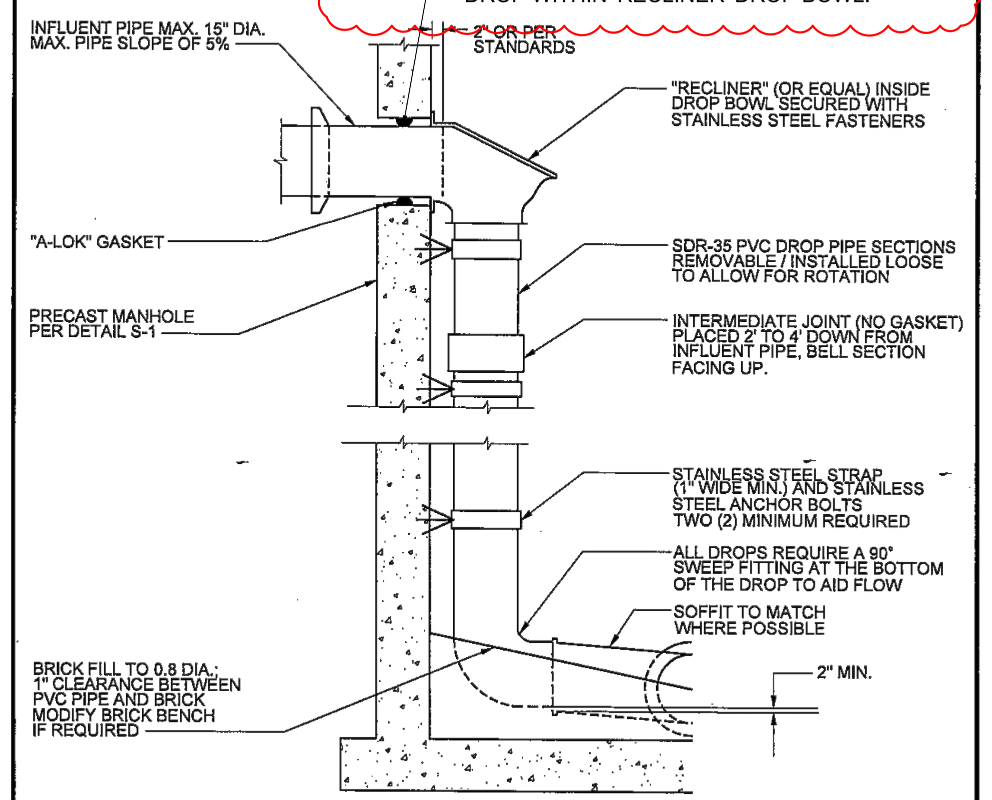

NOTES:

1) CONCRETE 4,500 P.S.I. AT 28 DAYS MINIMUM.
2) MANHOLE SHALL CONFORM TO ASTM C-478.
3) "O-RING" JOINTS MEET ASTM C-443.
4) MINIMUM TWO BRICK AND MORTAR COUNTS OR GRADE ADJUSTMENT RINGS AS REQUIRED 2", 3", 4" & 6", PERMITTED.
5) 48" DIAMETER MANHOLE MAY BE USED WITH ONE (1) 8" INSIDE DROP.
6) 72" DIAMETER MANHOLE REQUIRED WHEN TWO (2) OR MORE INSIDE DROPS.
7) DROP PIPE DIAMETER SAME AS INCOMING PIPE DIAMETER, (UP TO 8" DIA.).

Worcester County
Department of Public Works
Water & Wastewater Division

INSIDE DROP CONNECTION

DETAIL No. S-2
Date NOV. 7, 2017

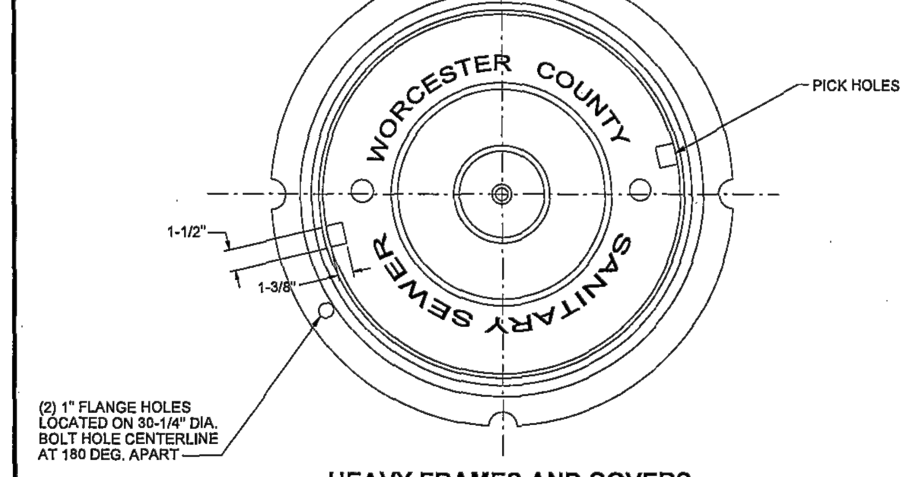

HEAVY FRAMES AND COVERS

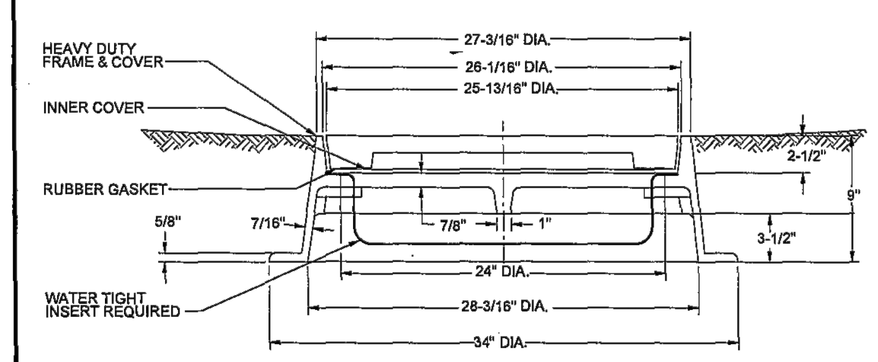

SECTION

FRAME & COVER - CAST IRON ASTM A-48, CLASS 30 AND DESIGN FOR H-20 LOADING

NOTES:

1) WHEN FRAME & COVER ARE USED FOR WATER VAULTS OR RELATED STRUCTURES, REPLACE "SANITARY SEWER" WITH "WATER".
2) STANDARD STRAIGHT WALL FRAME & COVER DOES NOT INCLUDE CAMS, BOLTS, BOLT HOLES AND RUBBER GASKET. WATERTIGHT STRAIGHT WALL FRAME & COVER INCLUDES CAMS, BOLTS, BOLT HOLES AND RUBBER GASKET.
3) DETAIL S-5 ACCEPTABLE EXCEPT WHEN SPECIFIC CONTRACT DOCUMENTS DICTATE OTHERWISE.

Worcester County
Department of Public Works
Water & Wastewater Division

STANDARD FRAME AND COVER

DETAIL No. S-5
Date NOV. 7, 2017

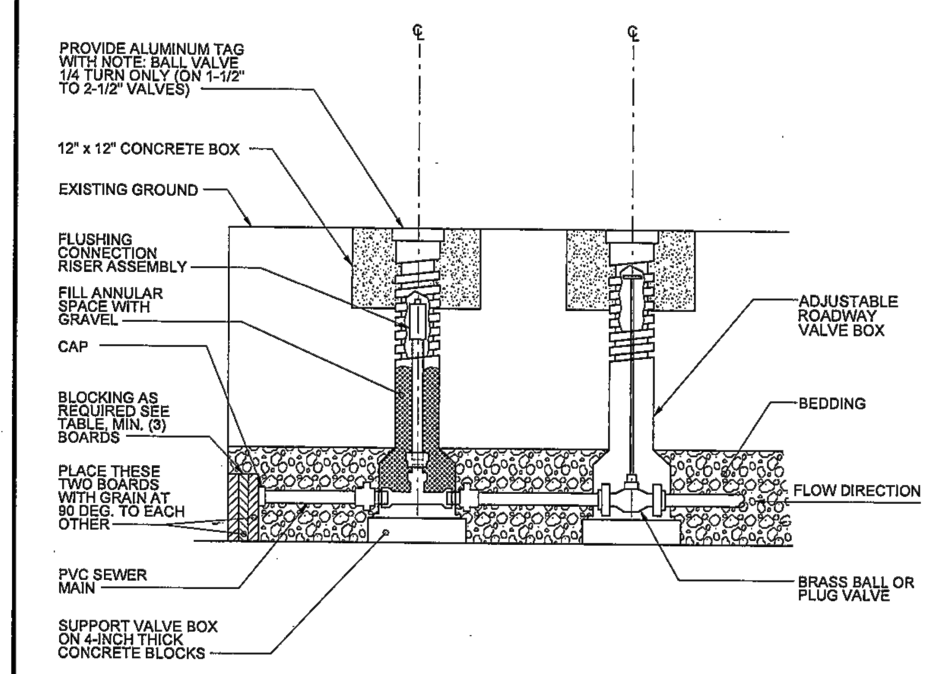

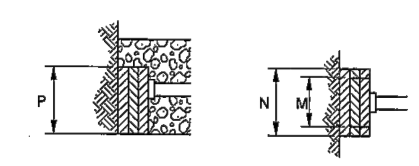

PIPE SIZE	M	N	P
1/4"	6"	6"	8"
1/2"	6"	6"	8"
2"	6"	8"	8"
2-1/2"	8"	8"	10"
3"	12"	18"	12"
4"	12"	18"	12"

BLOCKING DETAIL

Worcester County
Department of Public Works
Water & Wastewater Division

LOW PRESSURE SEWER TERMINAL FLUSHING CONNECTION

DETAIL No. S-12
Date NOV. 7, 2017

GENERAL NOTE:

MANUFACTURERS AND EQUIPMENT MODEL NUMBERS IDENTIFIED WITH THE DRAWINGS AND/OR SPECIFICATIONS REPRESENT THE BASIS OF DESIGN. AS A PART OF THE SUBMITTAL PROCESS DETAILED IN THE SPECIFICATIONS, THE CONTRACTOR MAY SUBMIT IN WRITING TO THE OWNER AND ENGINEER REQUESTS FOR APPROVED EQUALS.

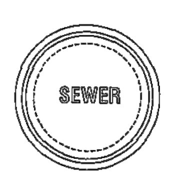

PLAN

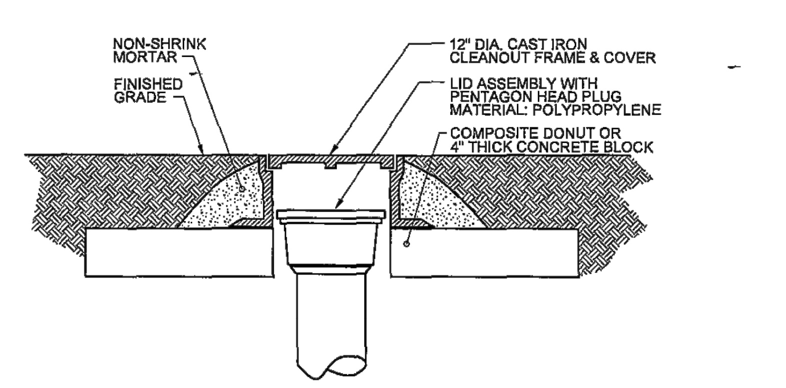

SECTION

Worcester County
Department of Public Works
Water & Wastewater Division

CLEAN-OUT WITH FRAME AND COVER

DETAIL No. S-8
Date NOV. 7, 2017

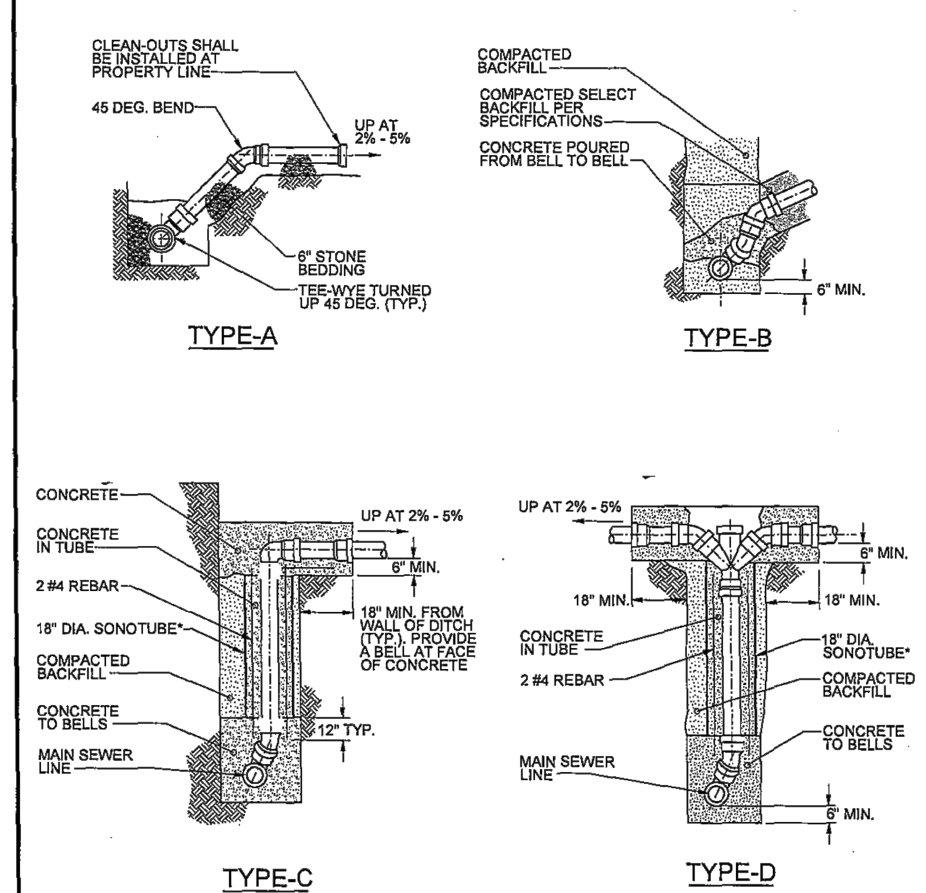

NOTES:

1) ALL CONCRETE SHALL HAVE A MINIMUM COMPRESSIVE STRENGTH OF 2,500 P.S.I..

Worcester County
Department of Public Works
Water & Wastewater Division

DROP HOUSE SERVICE CONNECTION AT MAIN

DETAIL No. S-7
Date NOV. 7, 2017

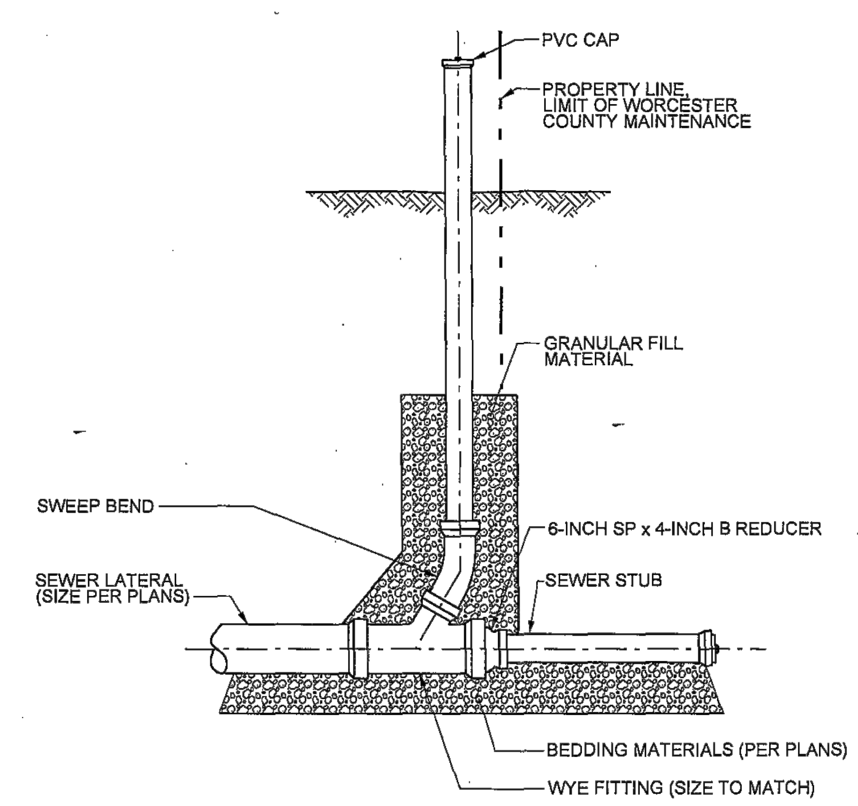

NOTES:

1) A 2-INCH x 6-INCH PLANK SHALL BE PLACED AT INVERT END OF SERVICE AND EXTEND 4 FEET ABOVE GRADE, PAINTED GREEN.

Worcester County
Department of Public Works
Water & Wastewater Division

HOUSE SERVICE CONNECTION AT MAIN

DETAIL No. S-6
Date NOV. 7, 2017

NOTES:

1. SEWER LATERAL SHALL MAINTAIN A MINIMUM OF 2 FEET FROM DITCH INVERT AND 3 FEET FROM EXISTING/PROPOSED GRADES.
2. THE SERVICE LATERAL AND CLEANOUT SHALL BE 6 INCH SDR-35 UNLESS OTHERWISE NOTED.
3. CLEANOUT SHALL NOT FALL WITHIN A CHANNEL SECTION. INSTALL AT THE BACK TOP OF DITCH.
4. SEE PLANS FOR INVERT ELEVATIONS AT EACH PROPERTY.

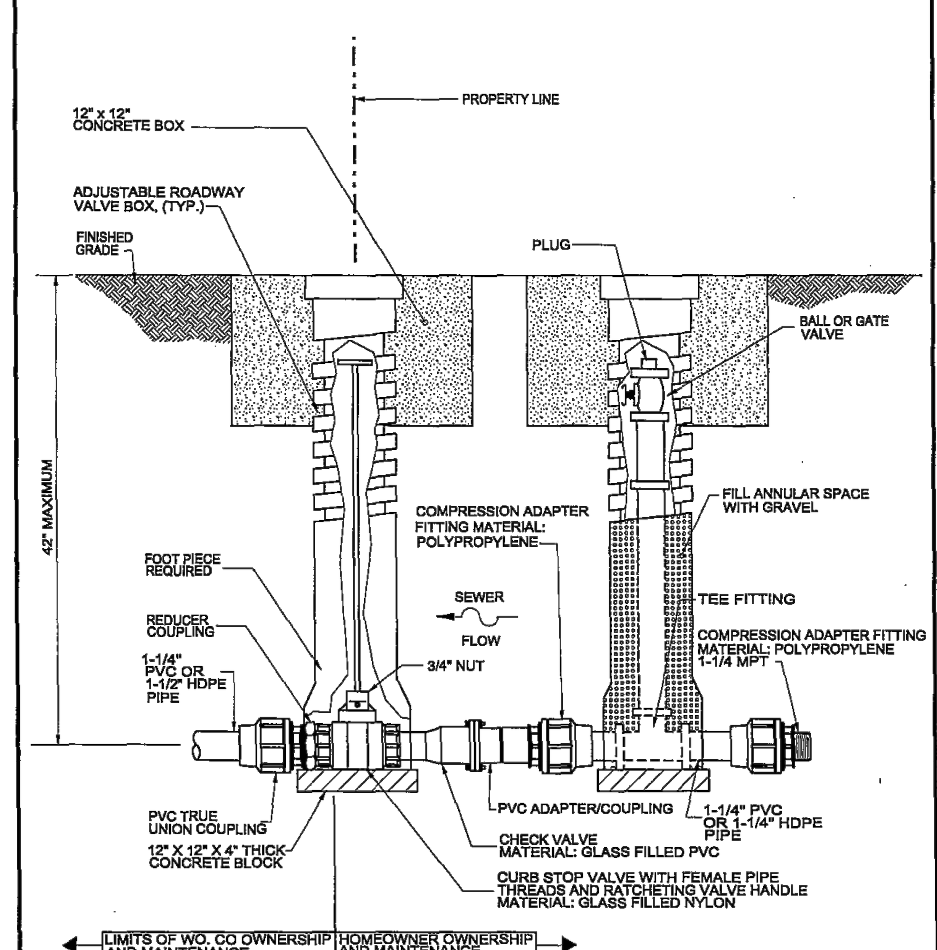

Worcester County
Department of Public Works
Water & Wastewater Division

LOW PRESSURE SEWER SERVICE CONNECTION

DETAIL No. S-11
Date NOV. 7, 2017

REVISIONS			
NO.	DATE	BY	DESCRIPTION
1	2024/09/25	NWH	REVISED PER USDA COMMENTS

DESIGN INFORMATION
DESIGNED BY: SCL/NWH
DRAWN BY: SCL/NWH
CHECKED BY: AS/DOK
PROJECT MANAGER: SCL

PROFESSIONAL CERTIFICATION. I HEREBY CERTIFY THAT THESE DOCUMENTS WERE PREPARED OR APPROVED BY ME, AND THAT I AM A DULY LICENSED PROFESSIONAL ENGINEER UNDER THE LAWS OF THE STATE OF MARYLAND, LICENSE NO. 55422 EXPIRATION DATE: DECEMBER 16, 2023

SEAL
STATE OF MARYLAND
STEVEN C. LEMASTERS
55422
PROFESSIONAL ENGINEER
09/05/23

WORCESTER COUNTY DEPARTMENT OF PUBLIC WORKS
LEWIS ROAD GRAVITY SEWER SYSTEM AND PUMP STATION

WORCESTER COUNTY, MARYLAND

DETAIL SHEET II

EA Engineering, Science, and Technology, Inc., PBC
11200 Racetrack Road, Unit A101
Ocean Pines, Maryland 21811
(410) 641-5341
www.eaest.com

SCALE AS SHOWN

FULL SIZE PLOT: 24" x 36"

DATE: SEPTEMBER 2023

PROJECT NUMBER: 6250909

C-502

SHEET: 15 OF 22

100% PLANS - NOT FOR CONSTRUCTION

FILE PATH: \\OCEANPINES\PROJECTS\DOCS\WORCESTER COUNTY\6250909 - LEWIS ROAD SEWER CONNECTION\CAD\PRODUCTION\DESIGN SET\C-501 DETAIL SHEETS.DWG [C-502] LEMASTERS, STEVEN 10/24/2024 12:08 PM

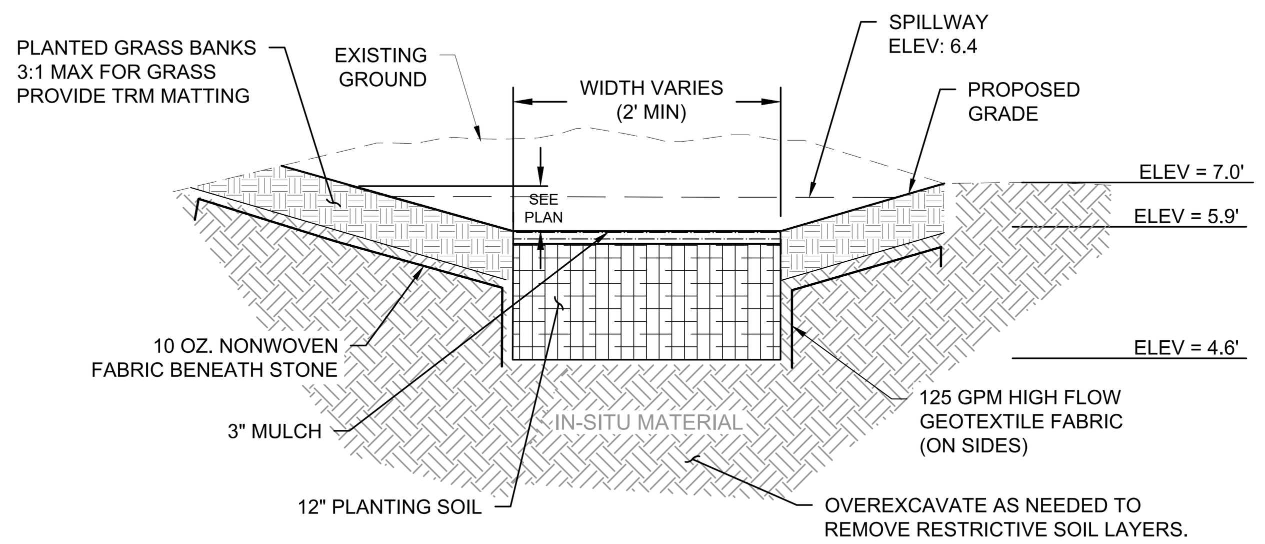

TYPICAL RAIN GARDEN SECTION DETAIL
NOT TO SCALE

NOTES:

1. IN-SITU MATERIALS SHALL BE TESTED FOR INFILTRATION RATES. RESULTS LESS THAN THAN 0.52 INCHES PER HOUR SHALL REQUIRE OVER-EXCAVATION AND MATERIAL REPLACEMENT.

MATERIALS SPECIFICATIONS FOR RAIN GARDENS, MICRO-BIORETENTION, & LANDSCAPE INFILTRATION

MATERIAL	SPECIFICATION	SIZE	NOTES
PLANTINGS	SEE PLANT LIST TABLE	N/A	PLANTINGS ARE SITE-SPECIFIC
PLANTING SOIL	LOAMY SAND (60 - 65%) & COMPOST (35 - 40%) OR SANDY LOAM (30%), COARSE SAND (30%) & COMPOST (40%)	N/A	ORGANIC CONTENT - MINIMUM 10% BY WEIGHT (ASTM D 2974) USDA SOIL TYPES LOAMY SAND OR SANDY LOAM; CLAY CONTENT <5% pH RANGE 5.5-7.0 - AMENDMENTS MAY BE USED TO INCREASE OR DECREASE pH
ORGANIC CONTENT	MIN. 10% BY DRY WEIGHT (ASTM-D-2974)		
MULCH	SHREDDED HARDWOOD		AGED 6 MONTHS, MINIMUM; NO PINE OR WOOD CHIPS
GEOTEXTILE		N/A	PE TYPE 1 NONWOVEN OR WOVEN 125 GPM
SAND	AASHTO-M-6 OR ASTM-C-33	0.02" TO 0.04"	SAND SUBSTITUTIONS SUCH AS DIABASE AND GRAYSTONE (AASHTO) #10 ARE NOT ACCEPTABLE. NO CALCIUM CARBONATED OR DOLOMITIC SAND SUBSTITUTIONS ARE ACCEPTABLE. NO "ROCK DUST" CAN BE USED FOR SAND.

CONTENT REPRODUCED FROM TABLE B.4.1 OF THE "2000 MARYLAND STORMWATER DESIGN MANUAL, VOLUME II, STORMWATER DESIGN APPENDICES," PUBLISHED BY THE MARYLAND DEPARTMENT OF THE ENVIRONMENT.

ESD AND UNIFIED SIZING CRITERIA

ENVIRONMENTAL SITE DESIGN VOLUME (ESDV)	262 CUBIC FEET (REQURED)	379 CUBIC FEET (PROVIDED IN M-7 RAIN GARDEN
WATER QUALITY VOLUME (WQv)	INCLUDED IN ESDv	
RECHARGE VOLUME (REv)	INCLUDED IN ESDv	
CHANNEL PROTECTION VOLUME (Cpv)	INCLUDED IN ESDv	
OVERBANK FLOOD PROTECTION (qP10)	PROVIDED THROUGH REDUCED RUNOFF CURVE NUMBER	

RAIN GARDEN INSPECTION SCHEDULE

MILESTONE
DURING EXCAVATION TO SUBGRADE
PLACEMENT OF PLANTING SOIL
FINAL GRADING AND ESTABLISHMENT OF PERMANENT STABILIZATION
AFTER PLANT INSTALLATION

RAIN GARDEN PLANT LIST

PLANTING TYPE	COMMON NAME	SCIENTIFIC NAME	HEIGHT / FORM	INDICATOR STATUS	NO. OF PLANTINGS	CONTAINER TYPE/SIZE
TREES	SPACED @ 14' - 18' O.C. (170 PER ACRE)					
	RED MAPLE	ACER RUBRUM	4' - 5'	FAC	1	1-GALLON CONTAINER
	EASTERN REDBUD	CERCIS CANADENSIS	3' - 4'	FACU	1	1-GALLON CONTAINER
SHRUBS	SPACED @ 10' - 14' O.C. (303 PER ACRE)					
	SILKY DOGWOOD	CORNUS AMOMUM	2' - 3'	FACW	2	#1 CONTAINER
	MALEBERRY	LYONIA LIGUSTRINA	2' - 3'	FACW	2	#1 CONTAINER
	SHINING SUMAC	RHUS COPALLINA	3' - 4'	NI	2	1-GALLON CONTAINER
	SOUTHERN ARROWWOOD	VIBURNUM DENTATUM	2' - 3'	FAC	2	#1 CONTAINER
HERBACEOUS FORBS / FERNS / GRASSES	SPACED @ 2' - 4' O.C. (4,840 PER ACRES)					
	NEW ENGLAND ASTER	ASTER NOVAE-ANGLIAE	FORB	FACW	4	2" PLUG
	JOE-PYE WEED	EUPATORIUM FISULOSUM	FORB	FACW	4	2" PLUG
	CARDINAL FLOWER	LOBELIA CARDINALIS	FORB	FACW	4	2" PLUG
	SENSITIVE FERN	ONOCLEA SENSIBILIS	FERN	FACW	4	QUART
	SWITCHGRASS	PANICUM VIRGATUM	GRASS	FAC	4	QUART
	LITTLE BLUESTERN	SCHIZACHYRIUM SCOPARIUM	GRASS	FACU	4	QUART
	INDIAN GRASS	SORGHASTRUM NUTANS	GRASS	UPL	4	2" PLUG

RAIN GARDEN OPERATIONS AND MAINTENANCE SCHEDULE

FREQUENCY OF INSPECTION	PREVENTATIVE MAINTENANCE	MAINTENANCE REQUIREMENTS
SEASONALLY (AND AFTER A MAJOR STORM EVENT)		IRRIGATE DURING PROLONGED DRY PERIODS.
	IF SPECIFIC PLANTS ARE NOT SURVIVING, REPLACE WITH MORE APPROPRIATE SPECIES	REMOVE ANY DEAD OR DYING VEGETATION AND REVEGETATE
		PRUNE VEGETATION OCCASIONALLY.
		REMOVE ACCUMULATED SEDIMENT FROM SURFACE OF BED AS NEEDED
		IF WATER PONDS FOR MORE THAN 48 HOURS, REMOVE AND REPLACE THE TOP FEW INCHES OF PLANTING SOIL
		REPLACE MULCH AS NECESSARY

CONTENT REPRODUCED FROM PAGE 59 OF THE "MARYLAND STORMWATER MANAGEMENT GUIDELINES FOR STATE & FEDERAL PROJECTS, APRIL 15, 2010," PUBLISHED BY THE DEPARTMENT OF THE ENVIRONMENT.

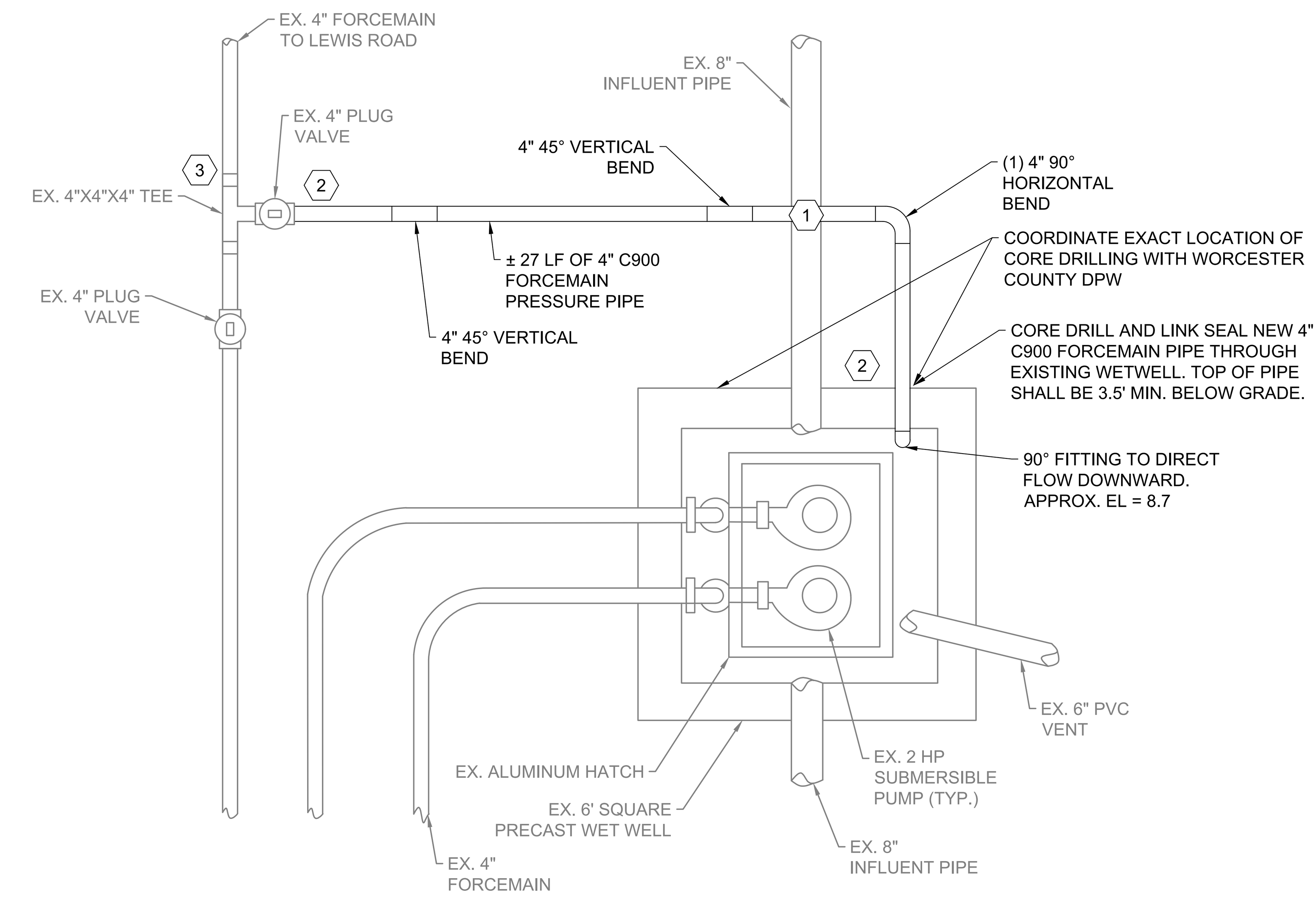

CONNECTION AT THE LANDINGS WWTP DETAIL
NOT TO SCALE

NOTES

1. PROVIDE A MINIMUM OF 6" HORIZONTAL SEPARATION BETWEEN EXISTING GRAVITY INFLUENT PIPE AND PROPOSED 4" C900 FORCEMAIN PIPE.
2. CONTRACTOR SHALL PERFORM TEST PITTING FOR CONDUITS, CONFIGURATION, AND MATERIALS. COORDINATE EXACT LOCATIONS OF PIPE ROUTING AND CONNECTIONS TO WETWELL WITH WORCESTER COUNTY DPW FOR APPROVAL PRIOR TO INSTALLATION.
3. THE EXISTING FORCEMAIN FROM LEWIS ROAD IS APPROXIMATELY 7 FEET BELOW GRADE. CONTRACTOR SHALL ACCOUNT FOR ALL MACHINERY, MATERIALS, AND EQUIPMENT NECESSARY TO PERFORM THE CONNECTION.

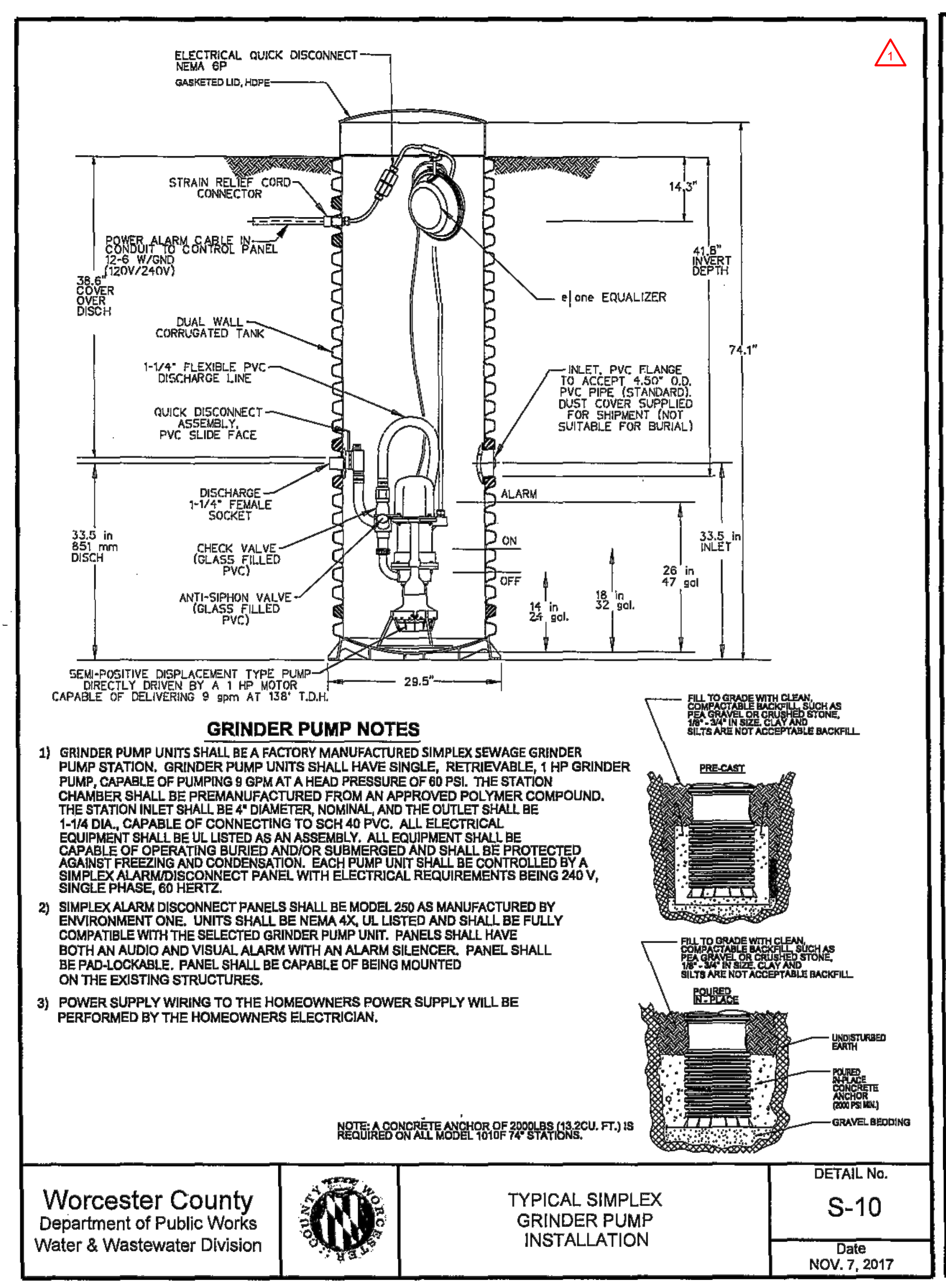

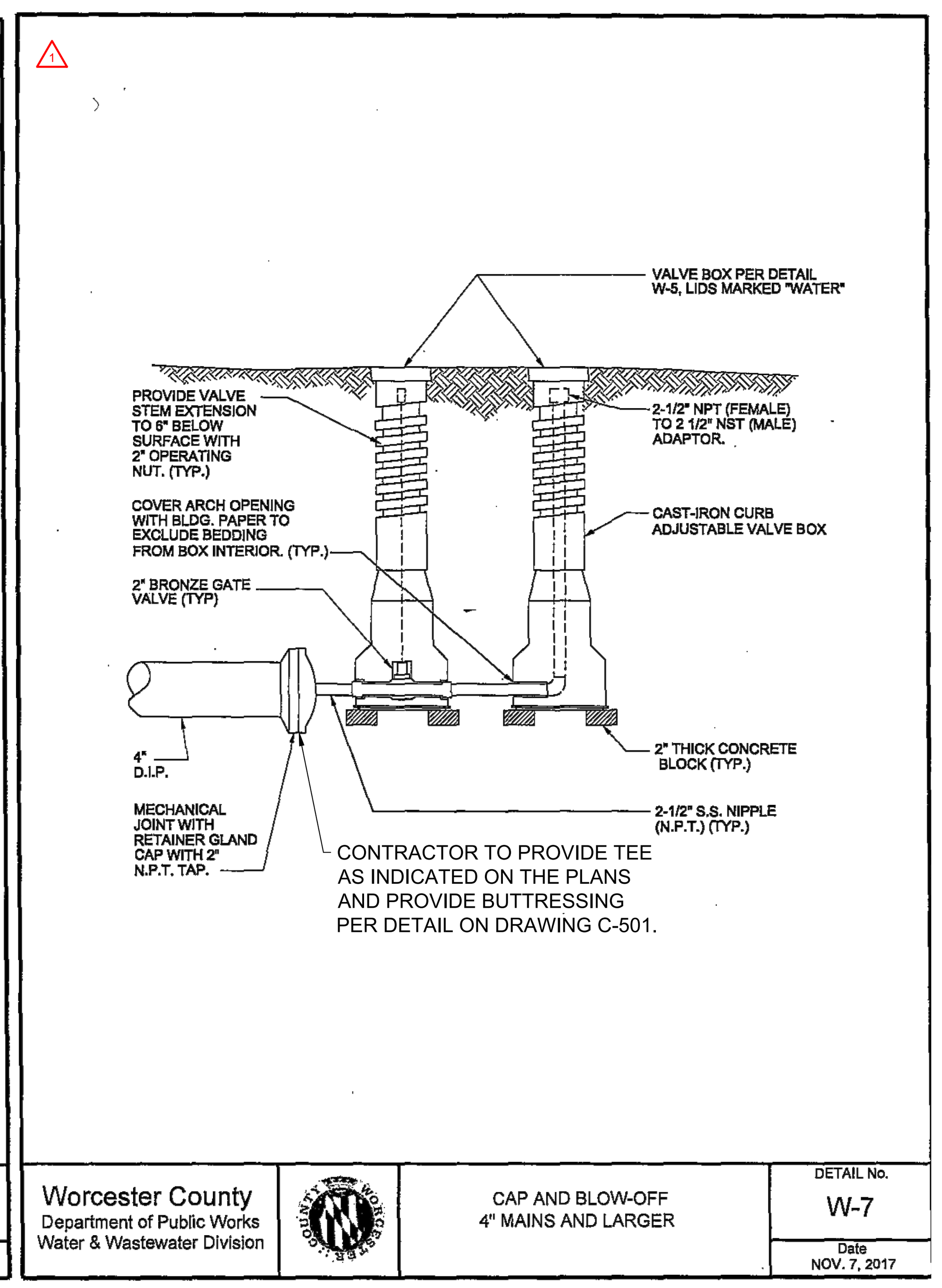

NOTES
1. CONTRACTOR MAY SUBMIT AN ALTERNATIVE AS EQUAL PRODUCT FOR APPROVAL.

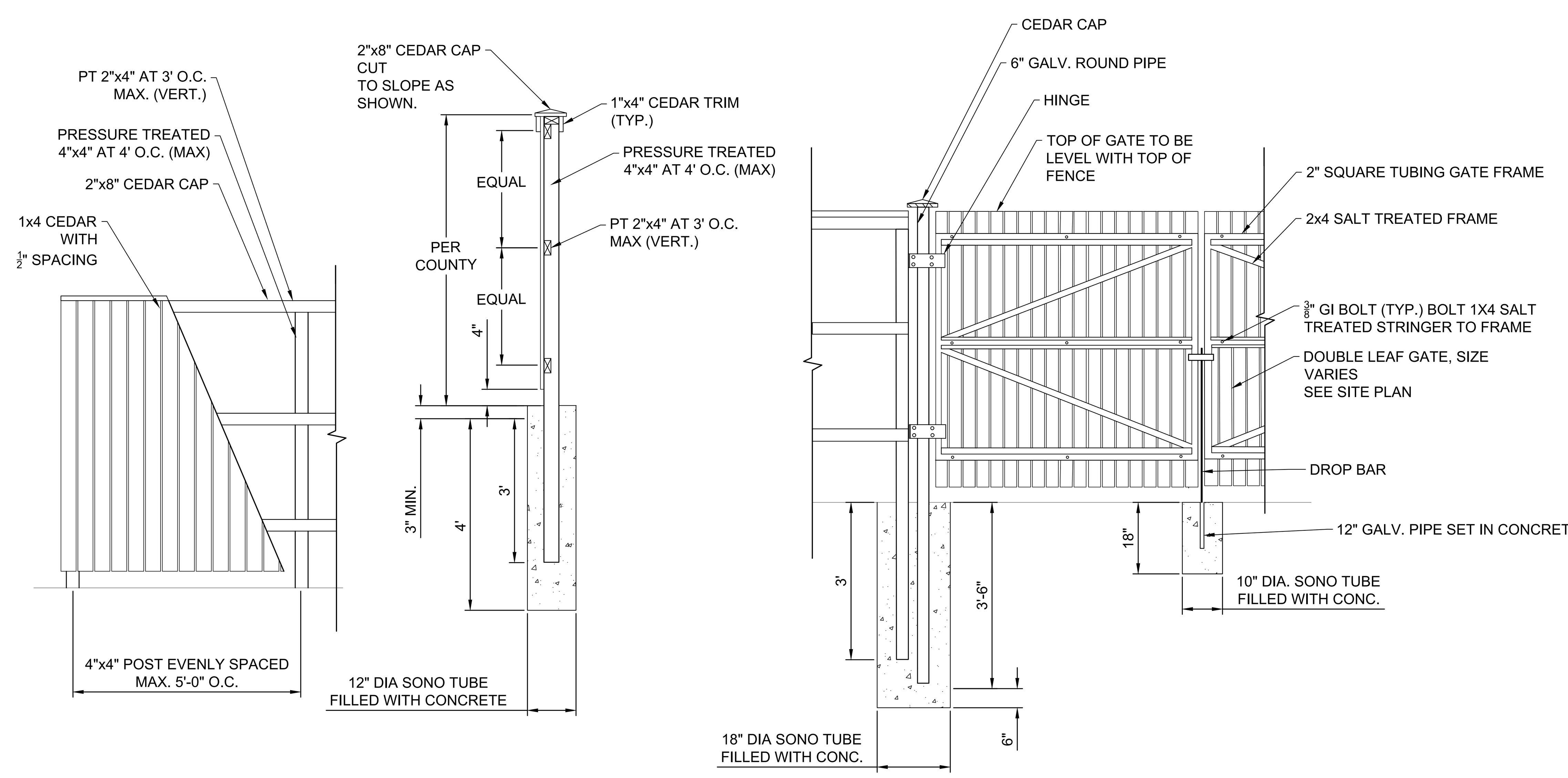

PUMP STATION FENCE DETAIL
NOT TO SCALE

NOTES
1. HEIGHT TO BE DETERMINED BY COUNTY.
2. FENCE POSTS AND FENCE FRAME ARE TO BE SALT TREATED.
3. GATE POST TO BE 6" X 6" GALVANIZED SQUARE TUBE.
4. ALL HARDWARE IS TO BE GALVANIZED.
5. HARDWARE FOR LOCKING MECHANISM SHALL BE PROVIDED FOR ALL GATES.
6. USE 4,000 PSI CONCRETE FOR POST SUPPORTS.

GENERAL NOTE:

MANUFACTURERS AND EQUIPMENT MODEL NUMBERS IDENTIFIED WITH THE DRAWINGS AND/OR SPECIFICATIONS REPRESENT THE BASIS OF DESIGN. AS A PART OF THE SUBMITTAL PROCESS DETAILED IN THE SPECIFICATIONS, THE CONTRACTOR MAY SUBMIT IN WRITING TO THE OWNER AND ENGINEER REQUESTS FOR APPROVED EQUALS.

REVISIONS

NO.	DATE	BY	DESCRIPTION
1	2024/09/25	NWH	REVISED PER USDA COMMENTS

DESIGN INFORMATION

DESIGNED BY:	DRAWN BY:	CHECKED BY:	PROJECT MANAGER:
SCL/NWH	SCL/NWH	AS/DOK	SCL

PROFESSIONAL CERTIFICATION. I HEREBY CERTIFY THAT THESE DOCUMENTS WERE PREPARED OR APPROVED BY ME, AND THAT I AM A DULY LICENSED PROFESSIONAL ENGINEER UNDER THE LAWS OF THE STATE OF MARYLAND, LICENSE NO. 55422 EXPIRATION DATE: DECEMBER 16, 2023

SEAL: STATE OF MARYLAND STEVEN C. LEMASTERS 55422 PROFESSIONAL ENGINEER 09/05/23

WORCESTER COUNTY DEPARTMENT OF PUBLIC WORKS
LEWIS ROAD GRAVITY SEWER SYSTEM AND PUMP STATION

WORCESTER COUNTY, MARYLAND

DETAIL SHEET III

EA Engineering, Science, and Technology, Inc., PBC
11200 Racetrack Road, Unit A101
Ocean Pines, Maryland 21811
(410) 641-5341
www.eaest.com

SCALE AS SHOWN

FULL SIZE PLOT: 24" x 36"

DATE: SEPTEMBER 2023

PROJECT NUMBER: 6250909

C-503

100% PLANS - NOT FOR CONSTRUCTION

FILE PATH: \\OCEANPINES\PROJECTS\DOCS\WORCESTER COUNTY\6250909 - LEWIS ROAD SEWER CONNECTION\CAD\PRODUCTION\DESIGN SET\C-501 DETAIL SHEETS.DWG [C-503] LEMASTERS, STEVEN 10/24/2024 12:08 PM

B-4 STANDARDS AND SPECIFICATIONS FOR VEGETATIVE STABILIZATION

DEFINITION

USING VEGETATION AS COVER TO PROTECT EXPOSED SOIL FROM EROSION.

PURPOSE

TO PROMOTE THE ESTABLISHMENT OF VEGETATION ON EXPOSED SOIL.

CONDITIONS WHERE PRACTICE APPLIES

ON ALL DISTURBED AREAS NOT STABILIZED BY OTHER METHODS. THIS SPECIFICATION IS DIVIDED INTO SECTIONS ON INCREMENTAL STABILIZATION; SOIL PREPARATION, SOIL AMENDMENTS AND TOPSOILING; SEEDING AND MULCHING; TEMPORARY STABILIZATION; AND PERMANENT STABILIZATION.

EFFECTS ON WATER QUALITY AND QUANTITY

STABILIZATION PRACTICES ARE USED TO PROMOTE THE ESTABLISHMENT OF VEGETATION ON EXPOSED SOIL. WHEN SOIL IS STABILIZED WITH VEGETATION, THE SOIL IS LESS LIKELY TO ERODE AND MORE LIKELY TO ALLOW INFILTRATION OF RAINFALL, THEREBY REDUCING SEDIMENT LOADS AND RUNOFF TO DOWNSTREAM AREAS.

PLANTING VEGETATION IN DISTURBED AREAS WILL HAVE AN EFFECT ON THE WATER BUDGET, ESPECIALLY ON VOLUMES AND RATES OF RUNOFF, INFILTRATION, EVAPORATION, TRANSPIRATION, PERCOLATION, AND GROUNDWATER RECHARGE. OVER TIME, VEGETATION WILL INCREASE ORGANIC MATTER CONTENT AND IMPROVE THE WATER HOLDING CAPACITY OF THE SOIL AND SUBSEQUENT PLANT GROWTH.

VEGETATION WILL HELP REDUCE THE MOVEMENT OF SEDIMENT, NUTRIENTS, AND OTHER CHEMICAL CARRIED BY RUNOFF TO RECEIVING WATERS. PLANTS WILL ALSO HELP PROTECT GROUNDWATER SUPPLIES BY ASSIMILATING THOSE SUBSTANCES PRESENT WITHIN THE ROOT ZONE.

SEDIMENT CONTROL PRACTICES MUST REMAIN IN PLACE DURING GRADING, SEEDBED PREPARATION, SEEDING, MULCHING, AND VEGETATIVE ESTABLISHMENT.

ADEQUATE VEGETATIVE ESTABLISHMENT

INSPECT SEEDED AREAS FOR VEGETATIVE ESTABLISHMENT AND MAKE NECESSARY REPAIRS, REPLACEMENTS, AND RESEEDINGS WITHIN THE PLANTING SEASON.

1. ADEQUATE VEGETATIVE STABILIZATION REQUIRES 95 PERCENT GROUNDCOVER.
2. IF AN AREA HAS LESS THAN 40 PERCENT GROUNDCOVER, RESTABILIZE FOLLOWING THE ORIGINAL RECOMMENDATIONS FOR LIME, FERTILIZER, SEEDBED PREPARATION, AND SEEDING.
3. IF AN AREA HAS BETWEEN 40 AND 94 PERCENT GROUNDCOVER, OVER-SEED AND FERTILIZE USING HALF OF THE RATES ORIGINALLY SPECIFIED.
4. MAINTENANCE FERTILIZER RATES FOR PERMANENT SEEDING ARE SHOWN IN TABLE B.6 FOUND WITHIN THE 2011 MARYLAND STANDARDS AND SPECIFICATIONS FOR SOIL EROSION AND SEDIMENT CONTROL MANUAL.

B-4-1 STANDARDS AND SPECIFICATIONS FOR SOIL PREPARATION, TOPSOILING, AND SOIL AMENDMENTS

DEFINITION

THE PROCESS OF PREPARING THE SOILS TO SUSTAIN ADEQUATE VEGETATIVE STABILIZATION.

PURPOSE

TO PROVIDE A SUITABLE SOIL MEDIUM FOR VEGETATIVE GROWTH.

CONDITIONS WHERE PRACTICE APPLIES

WHERE VEGETATIVE STABILIZATION IS TO BE ESTABLISHED.

CRITERIA

A. SOIL PREPARATION
 1. TEMPORARY STABILIZATION
  a. SEED PREPARATION CONSISTS OF LOOSENING SOIL TO A DEPTH OF 3 TO 5 INCHES BY MEANS OF SUITABLE AGRICULTURAL OR CONSTRUCTION EQUIPMENT, SUCH AS DISC HARROWS OR CHISEL PLOWS OR RIPPERS MOUNTED ON CONSTRUCTION EQUIPMENT. AFTER SOIL IS LOOSENED, IT MUST NOT BE ROLLED OR DRAGGED SMOOTH BUT LEFT IN ROUGHENED CONDITION. SLOPES 3H:1V OR FLATTER ARE TO BE TRACKED WITH RIDGES RUNNING PARALLEL TO THE CONTOUR OF THE SLOPE.
  b. APPLY FERTILIZER AND LIME AS PRESCRIBED ON THE PLANS.
  c. INCORPORATE LIME AND FERTILIZER INTO THE TOP 3 TO 5 INCHES OF SOIL BY DISKING OR OTHER SUITABLE MEANS.
 2. PERMANENT STABILIZATION
  a. A SOIL TEST IS REQUIRED FOR ANY EARTH DISTURBANCE OF 5 ACRES OR MORE. THE MINIMUM SOIL CONDITIONS REQUIRED FOR PERMANENT VEGETATIVE ESTABLISHMENT ARE:
   i. SOIL PH BETWEEN 6.0 TO 7.0.
   ii. SOLUBLE SALTS LESS THAN 500 PARTS PER MILLION (PPM).
   iii. SOIL CONTAINS LESS THAN 40 PERCENT CLAY BUT ENOUGH FINE GRAINED MATERIAL (GREATER THAN 30 PERCENT SILT PLUS CLAY) TO PROVIDE THE CAPACITY TO HOLD A MODERATE AMOUNT OF MOISTURE. AN EXCEPTION: IF LOVEGRASS WILL BE PLANTED, THEN A SANDY SOIL (LESS THAN 30 PERCENT SILT PLUS CLAY) WOULD BE ACCEPTABLE
   iv. SOIL CONTAINS 1.5 PERCENT MINIMUM ORGANIC MATTER BY WEIGHT.
   v. SOIL CONTAINS SUFFICIENT PORE SPACE TO PERMIT ADEQUATE ROOT PENETRATION
  b. APPLICATION OF AMENDMENTS OR TOPSOIL IS REQUIRED IF ON-SITE SOILS DO NOT MEET THE ABOVE CONDITIONS.
  c. GRADED AREAS MUST BE MAINTAINED IN A TRUE AND EVEN GRADE AS SPECIFIED ON THE APPROVED PLAN, THEN SCARIFIED OR OTHERWISE LOOSENED TO A DEPTH OF 3 TO 5 INCHES.
  d. APPLY SOIL AMENDMENTS AS SPECIFIED ON THE APPROVED PLAN OR AS INDICATED BY THE RESULTS OF A SOIL TEST.
  e. MIX SOIL AMENDMENTS INTO THE TOP 3 TO 5 INCHES OF SOIL BY DISKING OR OTHER SUITABLE MEANS. RAKE LAWN AREAS TO SMOOTH THE SURFACE, REMOVE LARGE OBJECTS LIKE STONES AND BRANCHES, AND READY THE AREA FOR SEED APPLICATION. LOOSEN SURFACE SOIL BY DRAGGING WITH A HEAVY CHAIN OR OTHER EQUIPMENT TO ROUGHEN THE SURFACE WHERE SITE CONDITIONS WILL NOT PERMIT NORMAL SEEDBED PREPARATION. TRACK SLOPES 3H:1V OR FLATTER WITH TRACKED EQUIPMENT LEAVING THE SOIL IN AN IRREGULAR CONDITION WITH RIDGES RUNNING PARALLEL TO THE CONTOUR OF THE SLOPE. LEAVE THE TOP 1 TO 3 INCHES OF SOIL LOOSE AND FRIABLE. SEEDBED LOOSENING MAY BE UNNECESSARY ON NEWLY DISTURBED AREAS.

B. TOPSOILING
 1. TOPSOIL IS PLACED OVER PREPARED SUBSOIL PRIOR TO ESTABLISHMENT OF PERMANENT VEGETATION. THE PURPOSE IS TO PROVIDE A SUITABLE SOIL MEDIUM FOR VEGETATIVE GROWTH. SOILS OF CONCERN HAVE LOW MOISTURE CONTENT, LOW NUTRIENT LEVELS, LOW PH, MATERIALS TOXIC TO PLANTS, AND/OR UNACCEPTABLE SOIL GRADATION.
 2. TOPSOIL SALVAGED FROM AN EXISTING SITE MAY BE USED PROVIDED IT MEETS THE STANDARDS AS SET FORTH IN THESE SPECIFICATIONS. TYPICALLY, THE DEPTH OF TOPSOIL TO BE SALVAGED FOR A GIVEN SOIL TYPE CAN BE FOUND IN REPRESENTATIVE SOIL PROFILE SECTION IN THE SOIL SURVEY PUBLISHED BY USDA-NRCS.
 3. TOPSOILING IS LIMITED TO AREAS HAVING 2H:1V OR FLATTER SLOPES WHERE:
  a. THE TEXTURE OF THE EXPOSED SUBSOIL/PARENT MATERIAL IS NOT ADEQUATE TO PRODUCE VEGETATIVE GROWTH.
  b. THE SOIL MATERIAL IS SO SHALLOW THAT THE ROOTING ZONE IS NOT DEEP ENOUGH TO SUPPORT PLANTS OR FURNISH CONTINUING SUPPLIES OF MOISTURE AND PLANT MATERIAL.
  c. THE ORIGINAL SOIL TO BE VEGETATED CONTAINS MATERIAL TOXIC TO PLANT GROWTH.
  d. THE SOIL IS SO ACIDIC THAT TREATMENT WITH LIMESTONE IS NOT FEASIBLE.
 4. AREAS HAVING SLOPES STEEPER THAN 2H:1V REQUIRE SPECIAL CONSIDERATION AND DESIGN.
 5. TOPSOIL SPECIFICATIONS: SOIL TO BE USED AS TOPSOIL MUST MEET THE FOLLOWING CRITERIA:
  a. TOPSOIL MUST BE A LOAM, SANDY LOAM, CLAY LOAM, SILT LOAM, SANDY CLAY LOAM, OR LOAMY SAND. OTHER SOILS MAY BE USED IF RECOMMENDED BY AN AGRONOMIST OR SOIL SCIENTIST AND APPROVED BY THE APPROPRIATE APPROVAL AUTHORITY. TOPSOIL MUST NOT BE A MIXTURE OF CONTRASTING TEXTURED SUBSOILS AND MUST CONTAIN LESS THAN 5 PERCENT BY VOLUME OF CINDERS, STONES, SLAG, COARSE FRAGMENTS, GRAVEL, STICKS, ROOTS, TRASH, OR OTHER MATERIALS LARGER THAN 1 ½ INCHES IN DIAMETER.
  b. TOPSOIL MUST BE FREE OF NOXIOUS PLANTS OR PLANT PARTS SUCH AS BERMUDA GRASS, QUACK GRASS, JOHNSON GRASS, NUT SEDGE, POISON IVY, THISTLE, OR OTHERS AS SPECIFIED.
  c. TOPSOIL SUBSTITUTES OR AMENDMENTS, AS RECOMMENDED BY A QUALIFIED AGRONOMIST OR SOIL SCIENTIST AND APPROVED BY THE APPROPRIATE APPROVAL AUTHORITY, MAY BE USED IN LIEU OF NATURAL TOPSOIL.
 6. TOPSOIL APPLICATION
  a. EROSION AND SEDIMENT CONTROL PRACTICES MUST BE MAINTAINED WHEN APPLYING TOPSOIL.
  b. UNIFORMLY DISTRIBUTE TOPSOIL IN A 5 TO 8 INCH LAYER AND LIGHTLY COMPACT TO A MINIMUM THICKNESS OF 4 INCHES. SPREADING IS TO BE PERFORMED IN SUCH A MANNER THAT SODDING OR SEEDING CAN PROCEED WITH A MINIMUM OF ADDITIONAL SOIL PREPARATION AND TILLAGE. ANY IRREGULARITIES IN THE SURFACE RESULTING FROM TOPSOILING OR OTHER OPERATIONS MUST BE CORRECTED IN ORDER TO PREVENT THE FORMATION OF DEPRESSIONS OR WATER POCKETS.
  c. TOPSOIL MUST NOT BE PLACED IF THE TOPSOIL OR SUBSOIL IS IN A FROZEN OR MUDDY CONDITION, WHEN THE SUBSOIL IS EXCESSIVELY WET OR IN A CONDITION THAT MAY OTHERWISE BE DETRIMENTAL TO PROPER GRADING AND SEEDBED PREPARATION.

C. SOIL AMENDMENTS (FERTILIZER AND LIME SPECIFICATIONS)
 1. SOIL TESTS MUST BE PERFORMED TO DETERMINE THE EXACT RATIOS AND APPLICATION RATES FOR BOTH LIME AND FERTILIZER ON SITES HAVING DISTURBED AREAS OF 5 ACRES OR MORE. SOIL ANALYSIS MAY BE PERFORMED BY A RECOGNIZED PRIVATE OR COMMERCIAL LABORATORY. SOIL SAMPLES TAKEN FOR ENGINEERING PURPOSES MAY ALSO BE USED FOR CHEMICAL ANALYSES.
 2. FERTILIZERS MUST BE UNIFORM IN COMPOSITION, FREE FLOWING AND SUITABLE FOR ACCURATE APPLICATION BY APPROPRIATE EQUIPMENT. MANURE MAY BE SUBSTITUTED FOR FERTILIZER WITH PRIOR APPROVAL FROM THE APPROPRIATE APPROVAL AUTHORITY. FERTILIZERS MUST ALL BE DELIVERED TO THE SITE FULLY LABELED ACCORDING TO THE APPLICABLE LAWS AND MUST BEAR THE NAME, TRADE NAME OR TRADEMARK AND WARRANTY OF THE PRODUCER.
 3. LIME MATERIALS MUST BE GROUND LIMESTONE (HYDRATED OR BURNT LIME MAY BE SUBSTITUTED EXCEPT WHEN HYDROSEEDING) WHICH CONTAINS AT LEAST 50 PERCENT TOTAL OXIDES (CALCIUM OXIDE PLUS MAGNESIUM OXIDE). LIMESTONE MUST BE GROUND TO SUCH FINENESS THAT AT LEAST 50 PERCENT WILL PASS THROUGH A #100 MESH SIEVE AND 98 TO 100 PERCENT WILL PASS THROUGH A #20 MESH SIEVE.
 4. LIME AND FERTILIZER ARE TO BE EVENLY DISTRIBUTED AND INCORPORATED INTO THE TOP 3 TO 5 INCHES OF SOIL BY DISKING OR OTHER SUITABLE MEANS.
 5. WHERE THE SUBSOIL IS EITHER HIGHLY ACIDIC OR COMPOSED OF HEAVY CLAYS, SPREAD GROUND LIMESTONE AT THE RATE OF 4 TO 8 TONS/ACRE (200-400 POUNDS PER 1,000 SQUARE FEET) PRIOR TO THE PLACEMENT OF TOPSOIL.

B-4-3 STANDARDS AND SPECIFICATIONS FOR SEEDING AND MULCHING

DEFINITION

THE APPLICATION OF SEED AND MULCH TO ESTABLISH VEGETATIVE COVER.

PURPOSE

TO PROTECT DISTURBED SOILS FROM EROSION DURING AND AT THE END OF CONSTRUCTION.

CONDITIONS WHERE PRACTICE APPLIES

TO THE SURFACE OF ALL PERIMETER CONTROLS, SLOPES, AND ANY DISTURBED AREA NOT UNDER ACTIVE GRADING.

CRITERIA

A. SEEDING
 1. SPECIFICATIONS

ALL SEED MUST MEET THE REQUIREMENT OF THE MARYLAND STATE SEED LAW. ALL SEED MUST BE SUBJECT TO RE-TESTING BY A RECOGNIZED SEED LABORATORY. ALL SEED USED MUST HAVE BEEN TESTED WITHIN THE 6 MONTHS IMMEDIATELY PRECEDING THE DATE OF SOWING SUCH MATERIAL ON ANY PROJECT. REFER TO TABLE B.4 FOUND WITHIN THE 2011 MARYLAND STANDARDS AND SPECIFICATIONS FOR SOIL EROSION AND SEDIMENT CONTROL MANUAL REGARDING THE QUALITY OF SEED. SEED TAGS MUST BE AVAILABLE UPON REQUEST TO THE INSPECTOR TO VERIFY TYPE OF SEED AND SEEDING RATE.

MULCH ALONE MAY BE APPLIED BETWEEN THE FALL AND SPRING SEEDING DATES ONLY IF THE GROUND IS FROZEN. THE APPROPRIATE SEEDING MIXTURE MUST BE APPLIED WHEN THE GROUND THAWS.

INOCULANTS: THE INOCULANT FOR TREATING LEGUME SEED IN THE SEED MIXTURES MUST BE A PURE CULTURE OF NITROGEN FIXING BACTERIA PREPARED SPECIFICALLY FOR THE SPECIES. INOCULANTS MUST NOT BE USED LATER THAN THE DATE INDICATED ON THE CONTAINER. ADD FRESH INOCULANTS AS DIRECTED ON THE PACKAGE. USE FOUR TIMES THE RECOMMENDED RATE WHEN HYDROSEEDING. NOTE: IT IS VERY IMPORTANT TO KEEP INOCULANT AS COOL AS POSSIBLE UNTIL USED. TEMPERATURES ABOVE 75 TO 80 DEGREES FAHRENHEIT CAN WEAKEN BACTERIA AND MAKE THE INOCULANT LESS EFFECTIVE.

SOD AND SEED MUST NOT BE PLACED ON SOIL WHICH HAS BEEN TREATED WITH SOIL STERILANTS OR CHEMICALS USED FOR WEED CONTROL UNTIL SUFFICIENT TIME HAS ELAPSED (14 DAYS MIN.) TO PERMIT DISSIPATION OF PHYTO-TOXIC MATERIALS.

 2. APPLICATION
  a. DRY SEEDING
   i. INCORPORATE SEED INTO THE SUBSOIL AT THE RATES PRESCRIBED ON TEMPORARY SEEDING TABLE B.1, PERMANENT SEEDING TABLE B.3, OR SITE-SPECIFIC SEEDING SUMMARIES AS FOUND WITHIN THE 2011 MARYLAND STANDARDS AND SPECIFICATIONS FOR SOIL EROSION AND SEDIMENT CONTROL MANUAL.
   ii. APPLY SEED IN TWO DIRECTIONS, PERPENDICULAR TO EACH OTHER. APPLY HALF THE SEEDING RATE IN EACH DIRECTION. ROLL THE SEEDED AREA WITH A WEIGHTED ROLLER TO PROVIDE GOOD SEED TO SOIL CONTACT.
  b. DRILL OR CULTIPACKER SEEDING: MECHANIZED SEEDERS THAT APPLY AND COVER SEED WITH SOIL.
   i. CULTIPACKING SEEDERS ARE REQUIRED TO BURY THE SEED IN SUCH A FASHION AS TO PROVIDE AT LEAST ¼ INCH OF SOIL COVERING. SEEDBED MUST BE FIRM AFTER PLANTING.
   ii. APPLY SEED IN TWO DIRECTIONS, PERPENDICULAR TO EACH OTHER. APPLY HALF THE SEEDING RATE IN EACH DIRECTION.
  c. HYDROSEEDING: APPLY SEED UNIFORMLY WITH HYDROSEEDER (SLURRY INCLUDES SEED AND FERTILIZER).
   i. IF FERTILIZER IS BEING APPLIED AT THE TIME OF SEEDING, THE APPLICATION RATES SHOULD BE EXCEED THE FOLLOWING: NITROGEN, 100 POUNDS PER ACRE TOTAL SOLUBLE NITROGEN; P_2O_5 (PHOSPHOROUS), 200 POUNDS PER ACRE; K_2O (POTASSIUM), 200 POUNDS PER ACRE.
   ii. LIME: USE ONLY GROUND AGRICULTURAL LIMESTONE (UP TO 3 TONS PER ACRE MAY BE APPLIED BY HYDROSEEDING). NORMALLY, NOT MORE THAN 2 TONS ARE APPLIED BY HYDROSEEDING AT ANY ONE TIME. DO NOT USE BURNT OR HYDRATED LIME WHEN HYDROSEEDING.
   iii. MIX SEED AND FERTILIZER ON SITE AND SEED IMMEDIATELY AND WITHOUT INTERRUPTION.
   iv. WHEN HYDROSEEDING, DO NOT INCORPORATE INTO THE SOIL.

B. MULCHING
 1. MULCH MATERIALS (IN ORDER OF PREFERENCE)
  a. STRAW CONSISTING OF THOROUGHLY THRESHED WHEAT, RYE, OAT, OR BARLEY AND REASONABLE BRIGHT IN COLOR. STRAW IS TO BE FREE OF NOXIOUS WEED SEEDS AS SPECIFIED IN THE MARYLAND SEE LAW AND NOT MUSTY, MOLDY, CAKED, DECAYED, OR EXCESSIVELY DUSTY. NOTE: USE ONLY STERILE STRAW MULCH IN AREAS WHERE ONE SPECIES OF GRASS IS DESIRED.
  b. WOOD CELLULOSE FIBER MULCH (WCFM) CONSISTING OF SPECIALLY PREPARED WOOD CELLULOSE PROCESSED INTO A UNIFORM FIBROUS PHYSICAL STATE.
   i. WCFM IS TO BE DYED GREEN OR CONTAIN A GREEN DYE IN THE PACKAGE THAT WILL PROVIDE AN APPROPRIATE COLOR TO FACILITATE VISUAL INSPECTION OF THE UNIFORMLY SPREAD SLURRY.
   ii. WCFM, INCLUDING DYE, MUST CONTAIN NO GERMINATION OR GROWTH INHIBITING FACTORS.
   iii. WCFM MATERIALS ARE TO BE MANUFACTURED AND PROCESSED IN SUCH A MANNER THAT THE WOOD CELLULOSE FIBER MULCH WILL REMAIN IN UNIFORM SUSPENSION IN WATER UNDER AGITATION AND WILL BLEND WITH SEED, FERTILIZER AND OTHER ADDITIVES TO FORM A HOMOGENOUS SLURRY. THE MULCH MATERIAL MUST FORM A BLOTTER-LIKE GROUND COVER, ON APPLICATION, HAVING MOISTURE ABSORPTION AND PERCOLATION PROPERTIES AND MUST COVER AND HOLD GRASS SEED IN CONTACT WITH THE SOIL WITHOUT INHIBITING THE GROWTH OF THE GRASS SEEDLINGS.
   iv. WCFM MATERIAL MUST NOT CONTAIN ELEMENTS OR COMPOUNDS AT CONCENTRATION LEVELS THAT WILL BY PHYTO-TOXIC.
   v. WCFM MUST CONFORM TO THE FOLLOWING PHYSICAL REQUIREMENTS: FIBER LENGTH OF APPROXIMATELY 10 MILLIMETERS, DIAMETER APPROXIMATELY 1 MILLIMETER, PH RANGE OF 4.0 TO 8.5, ASH CONTENT OF 1.6 PERCENT MAXIMUM AND WATER HOLDING CAPACITY OF 90 PERCENT MINIMUM.
 2. APPLICATION
  a. APPLY MULCH TO ALL SEEDED AREAS IMMEDIATELY AFTER SEEDING.
  b. WHEN STRAW MULCH IS USED, SPREAD IT OVER ALL SEEDED AREAS AT THE RATE OF 2 TONS PER ACRE TO A UNIFORM LOOSE DEPTH OF 1 TO 2 INCHES. APPLY MULCH TO ACHIEVE A UNIFORM DISTRIBUTION AND DEPTH SO THAT THE SOIL SURFACE IS NOT EXPOSED. WHEN USING A MULCH ANCHORING TOOL, INCREASE THE APPLICATION RATE TO 2.5 TONS PER ACRE.
  c. WOOD CELLULOSE FIBER USED AS MULCH MUST BE APPLIED AT A NET DRY WEIGHT OF 100 POUNDS PER ACRE. MIX THE WOOD CELLULOSE FIBER WITH WATER TO ATTAIN A MIXTURE WITH A MAXIMUM OF 50 POUNDS OF WOOD CELLULOSE FIBER PER 100 GALLONS OF WATER.
 3. ANCHORING
  a. PERFORM MULCH ANCHORING IMMEDIATELY FOLLOWING APPLICATION OF MULCH TO MINIMIZE LOSS BY WIND OR WATER. THIS MAY BE DONE BY ONE OF THE FOLLOWING METHODS (LISTED BY PREFERENCE), DEPENDING UPON THE SIZE OF THE AREA AND EROSION HAZARD:
   i. A MULCH ANCHORING TOOL IS A TRACTOR DRAWN IMPLEMENT DESIGNED TO PUNCH AND ANCHOR MULCH INTO THE SOIL SURFACE A MINIMUM OF 2 INCHES. THIS PRACTICE IS MOST EFFECTIVE ON LARGE AREAS, BUT IS LIMITED TO FLATTER SLOPES WHERE EQUIPMENT CAN OPERATE SAFELY. IF USED ON SLOPING LAND, THIS PRACTICE SHOULD FOLLOW THE CONTOUR.
   ii. WOOD CELLULOSE FIBER MAY BE USED FOR ANCHORING STRAW. APPLY THE FIBER BINDER AT A NET DRY WEIGHT OF 750 POUNDS PER ACRE. MIX THE WOOD CELLULOSE FIBER WITH WATER AT A MAXIMUM OF 50 POUNDS OF WOOD CELLULOSE FIBER PER 100 GALLONS OF WATER.
   iii. SYNTHETIC BINDERS SUCH AS ACRYLIC DLR (AGRO-TACK), DCA-70, PETROSET, TERRA TAX II, TERRA TACK AR OR OTHER APPROVED EQUAL MAY BE USED. FOLLOW APPLICATION RATES AS SPECIFIED BY THE MANUFACTURER. APPLICATION OF LIQUID BINDERS NEEDS TO BE HEAVIER AT THE EDGES WHERE WIND CATCHES MULCH, SUCH AS IN VALLEYS AND ON CRESTS OF BANKS. **USE OF ASPHALT BINDERS IS STRICTLY PROHIBITED.**
   iv. LIGHTWEIGHT PLASTIC NETTING MAY BE STAPLED OVER THE MULCH ACCORDING TO MANUFACTURER RECOMMENDATIONS. NETTING IS USUALLY AVAILABLE IN ROLLS 4 TO 15 FEET WIDE AND 300 TO 3,000 FEET LONG.

B-4-4 STANDARDS AND SPECIFICATIONS FOR TEMPORARY STABILIZATION

DEFINITION

TO STABILIZE DISTURBED SOILS WITH VEGETATION FOR UP TO 6 MONTHS.

PURPOSE

TO USE FAST GROWING VEGETATION THAT PROVIDES COVER ON DISTURBED SOILS.

CONDITIONS WHERE PRACTICE APPLIES

EXPOSED SOILS WHERE GROUND COVER IS NEEDED FOR A PERIOD OF 6 MONTHS OR LESS. FOR LONGER DURATION OF TIME, PERMANENT STABILIZATION PRACTICES ARE REQUIRED.

CRITERIA

1. SELECT ONE OR MORE OF THE SPECIES OR SEED MIXTURES LISTED IN TABLE B.1 FOR THE APPROPRIATE PLANT HARDINESS ZONE (FROM FIGURE B.3), AND ENTER THEM IN THE TEMPORARY SEEDING SUMMARY BELOW ALONG WITH APPLICATION RATES, SEEDING DATES AND SEEDING DEPTHS. IF THE SUMMARY IS NOT PUT ON THE PLAN AND COMPLETED, THEN TABLE B.1 PLUS FERTILIZER AND LIME RATES MUST BE PUT ON THE PLAN. THE TABLES AND FIGURE CAN BE FOUND WITHIN THE 2011 MARYLAND STANDARDS AND SPECIFICATIONS FOR SOIL EROSION AND SEDIMENT CONTROL MANUAL.
2. FOR SITES HAVING SOIL TESTS PERFORMED, USE AND SHOW THE RECOMMENDED RATES BY THE TESTING AGENCY. SOILS TESTS ARE NOT REQUIRED FOR TEMPORARY SEEDING.
3. WHEN STABILIZATION IS REQUIRED OUTSIDE OF A SEEDING SEASON, APPLY SEED AND MULCH OR STRAW MULCH ALONG AS PRESCRIBED IN SECTION B-4-3.A.1.1B AND MAINTAIN UNTIL THE NEXT SEEDING SEASON.

B-4-5 STANDARDS AND SPECIFICATIONS FOR PERMANENT STABILIZATION

DEFINITION

TO STABILIZE DISTURBED SOILS WITH PERMANENT VEGETATION.

PURPOSE

TO USE LONG-LIVED PERENNIAL GRASSES AND LEGUMES TO ESTABLISH PERMANENT COVER ON DISTURBED SOILS.

CONDITIONS WHERE PRACTICE APPLIES

EXPOSED SOILS WHERE GROUND COVER IS NEEDED FOR 6 MONTHS OR MORE.

CRITERIA

A. SEED MIXTURES
 1. GENERAL USE
  a. SELECT ONE OR MORE OF THE SPECIES OR MIXTURES LISTED IN TABLE B.3 FOR THE APPROPRIATE PLANT HARDINESS ZONE (FROM FIGURE B.3) AND BASED ON THE SITE CONDITION OR PURPOSE FOUND ON TABLE B.2 AS FOUND WITHIN THE 2011 MARYLAND STANDARDS AND SPECIFICATIONS FOR SOIL EROSION AND SEDIMENT CONTROL MANUAL. ENTER SELECTED MIXTURE(S), APPLICATION RATES, AND SEEDING DATES IN THE PERMANENT SEEDING SUMMARY. THE SUMMARY IS TO BE PLACED ON THE PLAN AS SHOWN ON THIS SHEET.
  b. ADDITIONAL PLANTING SPECIFICATIONS FOR EXCEPTIONAL SITES SUCH AS SHORELINES, STREAM BANKS, OR DUNES OR FOR SPECIAL PURPOSES SUCH AS WILDLIFE OR AESTHETIC TREATMENT MAY BE FOUND IN USDA-NRCS TECHNICAL FIELD OFFICE GUIDE, SECTION 342 - CRITICAL AREA PLANTING.
  c. FOR SITES HAVING DISTURBED AREA OVER 5 ACRES, USE AND SHOW THE RATES RECOMMENDED BY THE SOIL TESTING AGENCY.
  d. FOR AREAS RECEIVING LOW MAINTENANCE, APPLY UREA FORM FERTILIZER (46-0-0) AT 3 ½ POUNDS PER 1000 SQUARE FEET (150 POUNDS PER ACRE) AT THE TIME OF SEEDING IN ADDITION TO THE SOIL AMENDMENTS SHOWN IN THE PERMANENT SEEDING SUMMARY.
 2. TURFGRASS MIXTURES
  a. AREAS WHERE TURFGRASS MAY BE DESIRED INCLUDE LAWNS, PARKS, PLAYGROUNDS, AND COMMERCIAL SITES WHICH WILL RECEIVE A MEDIUM TO HIGH LEVEL OF MAINTENANCE.
  b. SELECT ONE OR MORE OF THE SPECIES OR MIXTURES LISTED BELOW BASED ON THE SITE CONDITIONS OR PURPOSE. ENTER SELECTED MIXTURE(S), APPLICATION RATES, AND SEEDING DATES IN THE PERMANENT SEEDING SUMMARY. THE SUMMARY IS TO BE PLACED ON THE PLAN:
   i. KENTUCKY BLUEGRASS: FULL SUN MIXTURE: FOR USE IN AREAS THAT RECEIVE INTENSIVE MANAGEMENT. IRRIGATION REQUIRED IN THE AREAS OF CENTRAL MARYLAND AND EASTERN SHORE. RECOMMENDED CERTIFIED KENTUCKY BLUEGRASS CULTIVARS SEEDING RATE: 1.5 TO 2.0 POUNDS PER 1000 SQUARE FEET. CHOOSE A MINIMUM OF THREE KENTUCKY BLUEGRASS CULTIVARS WITH EACH RANGING FROM 10 TO 35 PERCENT OF TOTAL MIXTURE BY WEIGHT.
   ii. KENTUCKY BLUEGRASS/PERENNIAL RYE: FULL SUN MIXTURE: FOR USE IN FULL SUN AREAS WHERE RAPID ESTABLISHMENT IS NECESSARY AND WHEN TURF WILL RECEIVE MEDIUM TO INTENSIVE MANAGEMENT. CERTIFIED PERENNIAL RYEGRASS CULTIVARS/CERTIFIED KENTUCKY BLUEGRASS SEEDING RATE: 2 POUNDS MIXTURE PER 1000 SQUARE FEET. CHOOSE A MINIMUM OF THREE KENTUCKY BLUEGRASS CULTIVARS WITH EACH RANGING FROM 10 TO 35 PERCENT OF THE TOTAL MIXTURE BY WEIGHT.
   iii. TALL FESCUE/KENTUCKY BLUEGRASS: FULL SUN MIXTURE: FOR USE IN DROUGHT PRONE AREAS AND/OR FOR AREAS RECEIVING LOW TO MEDIUM MANAGEMENT IN FULL SUN TO MEDIUM SHADE. RECOMMENDED MIXTURE INCLUDES; CERTIFIED TALL FESCUE CULTIVARS 95 TO 100 PERCENT, CERTIFIED KENTUCKY BLUEGRASS CULTIVARS 0 TO 5 PERCENT. SEEDING RATE: 5 TO 8 POUNDS PER 1000 SQUARE FEET. ONE OR MORE CULTIVARS MAY BE BLENDED.
   iv. KENTUCKY BLUEGRASS/FINE FESCUE: SHADE MIXTURE: FOR USE IN AREAS WITH SHADE IN BLUEGRASS LAWNS. FOR ESTABLISHMENT IN HIGH QUALITY, INTENSIVELY MANAGED TURF AREA. MIXTURE INCLUDES; CERTIFIED KENTUCKY BLUEGRASS CULTIVARS 30 TO 40 PERCENT AND CERTIFIED FINE FESCUE 60 TO 70 PERCENT. SEEDING RATE: 1 ½ TO 3 POUNDS PER 1000 SQUARE FEET.

   NOTES:
   SELECT TURFGRASS VARIETIES FROM THOSE LISTED IN THE MOST CURRENT UNIVERSITY OF MARYLAND PUBLICATION, AGRONOMY MEMO #77, "TURFGRASS CULTIVAR RECOMMENDATIONS FOR MARYLAND".
   CHOOSE CERTIFIED MATERIAL. CERTIFIED MATERIAL IS THE BEST GUARANTEE OF CULTIVAR PURITY. THE CERTIFICATION PROGRAM OF THE MARYLAND DEPARTMENT OF AGRICULTURE, TURF AND SEED SECTION, PROVIDES A RELIABLE MEANS OF CONSUMER PROTECTION AND ASSURES A PURE GENETIC LINE.
  c. IDEAL TIMES OF SEEDING FOR TURF GRASS MIXTURES
   WESTERN MARYLAND: MARCH 15 TO JUNE 1, AUGUST 1 TO OCTOBER 1 (HARDINESS ZONES: 5B, 6A)
   CENTRAL MARYLAND: MARCH 1 TO MAY 15, AUGUST 15 TO OCTOBER 15 (HARDINESS ZONE: 6B)
   SOUTHERN MD, EASTERN SHORE: MARCH 1 TO MAY 15, AUGUST 15 TO OCTOBER 15 (HARDINESS ZONES: 7A, 7B)
  d. TILL AREAS TO RECEIVE SEED BY DISKING OR OTHER APPROVED METHODS TO A DEPTH OF 2 TO 4 INCHES, LEVEL AND RAKE THE AREAS TO PREPARE A PROPER SEEDBED. REMOVE STONES AND DEBRIS OVER 1 ½ INCHES IN DIAMETER. THE RESULTING SEEDBED MUST BE IN SUCH CONDITION THAT FUTURE MOWING OF GRASSES WILL POSE NO DIFFICULTY.
  e. IF SOIL MOISTURE IS DEFICIENT, SUPPLY NEW SEEDINGS WITH ADEQUATE WATER FOR PLANT GROWTH (½ TO 1 INCH EVER 3 TO 4 DAYS DEPENDING ON SOIL TEXTURE) UNTIL THEY ARE FIRMLY ESTABLISHED. THIS IS ESPECIALLY TRUE WHEN SEEDINGS ARE MADE LATE IN THE PLANTING SEASON, IN ABNORMALLY DRY OR HOT SEASONS, OR ON ADVERSE SITES.

B. SOD: TO PROVIDE QUICK COVER ON DISTURBED AREAS (2H:1V GRADE OR FLATTER).
 1. GENERAL SPECIFICATIONS
  a. CLASS OF TURFGRASS SOD MUST BE MARYLAND STATE CERTIFIED. SOD LABELS MUST BE MADE AVAILABLE TO THE JOB FOREMAN AND INSPECTOR.
  b. SOD MUST BE MACHINE CUT AT A UNIFORM SOIL THICKNESS OF ¾ INCHES, PLUS OR MINUS ¼ INCH, AT THE TIME OF CUTTING. MEASUREMENT FOR THICKNESS MUST EXCLUDE TOP GROWTH AND THATCH. BROKEN PADS AND TORN OR UNEVEN ENDS WILL NOT BE ACCEPTABLE.
  c. STANDARD SIZE SECTIONS OF SOD MUST BE STRONG ENOUGH TO SUPPORT THEIR OWN WEIGHT AND RETAIN THEIR SIZE AND SHAPE WHEN SUSPENDED VERTICALLY WITH A FIRM GRASP ON THE UPPER 10 PERCENT OF THE SECTION.
  d. SOD MUST NOT BE HARVESTED OR TRANSPLANTED WHEN MOISTURE CONTENT (EXCESSIVELY DRY OR WET) MAY ADVERSELY AFFECT ITS SURVIVAL.
  e. SOD MUST BE HARVESTED, DELIVERED, AND INSTALLED WITHIN A PERIOD OF 36 HOURS. SOD NOT TRANSPLANTED WITHIN THIS PERIOD MUST BE APPROVED BY AN AGRONOMIST OR SOIL SCIENTIST PRIOR TO ITS INSTALLATION
 2. SOD INSTALLATION
  a. DURING PERIODS OF EXCESSIVELY HIGH TEMPERATURE OR IN AREAS HAVING DRY SUBSOIL, LIGHTLY IRRIGATE THE SUBSOIL IMMEDIATELY PRIOR TO LAYING THE SOD.
  b. LAY THE FIRST ROW OF SOD IN A STRAIGHT LINE WITH SUBSEQUENT ROWS PLACE PARALLEL TO IT AND TIGHTLY WEDGED AGAINST EACH OTHER. STAGGER LATERAL JOINTS TO PROMOTE MORE UNIFORM GROWTH AND STRENGTH. ENSURE THAT SOD IS NOT STRETCHED OR OVERLAPPED AND THAT ALL JOINTS ARE BUTTED TIGHT IN ORDER TO PREVENT VOIDS WHICH WOULD CAUSE AIR DRYING OF THE ROOTS.
  c. WHEREVER POSSIBLE, LAY SOD WITH THE LONG EDGES PARALLEL TO THE CONTOUR AND WITH STAGGERING JOINTS. ROLL AND TAMP, PEG OR OTHERWISE SECURE THE SOD TO PREVENT SLIPPAGE ON SLOPES. ENSURE SOLID CONTACT EXISTS BETWEEN SOD ROOTS AND THE UNDERLYING SOIL SURFACE.
  d. WATER THE SOD IMMEDIATELY FOLLOWING ROLLING AND TAMPING UNTIL THE UNDERSIDE OF THE NEW SOD PAD AND SOIL SURFACE BELOW THE SOD ARE THOROUGHLY WET. COMPLETE THE OPERATION OF LAYING, TAMPING AND IRRIGATING FOR ANY PIECE OF SOD WITHIN EIGHT HOURS.
 3. SOD MAINTENANCE
  a. IN THE ABSENCE OF ADEQUATE RAINFALL, WATER DAILY DURING THE FIRST WEEK OR AS OFTEN AND SUFFICIENTLY AS NECESSARY TO MAINTAIN MOIST SOIL TO A DEPTH OF 4 INCHES. WATER SOD DURING THE HEAT OF THE DAY TO PREVENT WILTING.
  b. AFTER THE FIRST WEEK, SOD WATERING IS REQUIRED AS NECESSARY TO MAINTAIN ADEQUATE MOISTURE CONTENT.
  c. DO NOT MOW UNTIL THE SOD IS FIRMLY ROOTED. NO MORE THAN ⅓ OF THE GRASS LEAF MUST BE REMOVED BY THE INITIAL CUTTING OR SUBSEQUENT CUTTINGS. MAINTAIN A GRASS HEIGHT OF AT LEAST 3 INCHES UNLESS OTHERWISE SPECIFIED.

B-4-8 STANDARDS AND SPECIFICATIONS FOR STOCKPILE AREAS

DEFINITION

A MOUND OR PILE OF SOIL PROTECTED BY APPROPRIATELY DESIGNED EROSION AND SEDIMENT CONTROL MEASURES.

PURPOSE

TO PROVIDE A DESIGNATED LOCATION FOR THE TEMPORARY STORAGE OF SOIL THAT CONTROLS THE POTENTIAL FOR EROSION, SEDIMENTATION, AND CHANGES TO DRAINAGE PATTERNS.

CONDITIONS WHERE PRACTICE APPLIES

STOCKPILE AREAS ARE UTILIZED WHEN IT IS NECESSARY TO SALVAGE AND STORE SOIL FOR LATER USE.

CRITERIA

THE STOCKPILE LOCATION AND ALL RELATED SEDIMENT CONTROL PRACTICES MUST BE CLEARLY INDICATED ON THE EROSION AND SEDIMENT CONTROL PLAN.

1. THE FOOTPRINT OF THE STOCKPILE MUST BE SIZED TO ACCOMMODATE THE ANTICIPATED VOLUME OF MATERIAL AND BASED ON A SIDE SLOPE RATIO NO STEEPER THAN 2H:1V. BENCHING MUST BE PROVIDED IN ACCORDANCE WITH SECTION B-3 LAND GRADING OF THE 2011 MARYLAND STANDARDS AND SPECIFICATIONS FOR SOIL EROSION AND SEDIMENT CONTROL MANUAL.
2. RUNOFF FROM THE STOCKPILE AREA MUST DRAIN TO A SUITABLE SEDIMENT CONTROL PRACTICE.
3. ACCESS THE STOCKPILE AREA FROM THE UPGRADE SIDE.
4. CLEAR WATER RUNOFF INTO THE STOCKPILE AREA MUST BE MINIMIZED BY USE OF A DIVERSION FENCE SUCH AS AN EARTH DIKE, TEMPORARY SWALE OR DIVERSION FENCE. PROVISIONS MUST BE MADE FOR DISCHARGING CONCENTRATED FLOW IN A NON-EROSIVE MANNER.
5. WHERE RUNOFF CONCENTRATES ALONG THE TOE OF THE STOCKPILE FILL, AN APPROPRIATE EROSION/SEDIMENT CONTROL PRACTICE MUST BE USED TO INTERCEPT THE DISCHARGE.
6. STOCKPILES MUST BE STABILIZED IN ACCORDANCE WITH THE 3/7 DAY STABILIZATION REQUIREMENT AS WELL AS STANDARD B-4-1 INCREMENTAL STABILIZATION AND STANDARD B-4-4 TEMPORARY STABILIZATION.
7. IF THE STOCKPILE IS LOCATED ON AN IMPERVIOUS SURFACE, A LINER SHOULD BE PROVIDED BELOW THE STOCKPILE TO FACILITATE CLEANUP. STOCKPILES CONTAINING CONTAMINATED MATERIAL MUST BE COVERED WITH IMPERMEABLE SHEETING.

MAINTENANCE

THE STOCKPILE AREA MUST CONTINUOUSLY MEET THE REQUIREMENTS FOR ADEQUATE VEGETATIVE ESTABLISHMENT IN ACCORDANCE WITH SECTION B-4 VEGETATIVE STABILIZATION. SIDE SLOPES MUST BE MAINTAINED AT NO STEEPER THAN A 2H:1V RATIO. THE STOCKPILE AREA MUST BE KEPT FREE OF EROSION. IF THE VERTICAL HEIGHT OF A STOCKPILE EXCEEDS 20 FEET FOR 2H:1V SLOPES, 30 FEET FOR 3H:1V SLOPES OR 40 FEET FOR 4:1 SLOPES, BENCHING MUST BE PROVIDED IN ACCORDANCE WITH SECTION B-3 LAND GRADING.

TEMPORARY SEEDING SUMMARY

NO.	SPECIES	APPLICATION RATE (LB/AC)	SEEDING DATES	SEEDING DEPTHS	FERTILIZER RATE (10-20-20)	LIME RATE
HARDINESS ZONE: 7B SEED MIXTURE:						
1	ANNUAL RYEGRASS (Lolium perenne ssp. multiflorum)	40 LB/AC (1.0 LB/1000 SF)	FEB 15 - APRIL 30; AUG 15 - NOV 30	0.5 IN	436 LB/AC (10 LB/ 1000SF)	2 TONS/AC (90 LB/ 1000SF)
2	FOXTAIL MILLET (Setaria italica)	30 LB/AC (0.7 LB/1000 SF)	MAY 1 - AUG 14	0.5 IN		
3						
4						

APPLY STRAW MULCH AT 2 TONS PER ACRE (90 LB/1000 SF) OR WOOD CELLULOSE FIBER AT 1500 LB/ACRE (35 LBS/1000 SF) IMMEDIATELY AFTER SEEDING, ANCHOR MULCH IMMEDIATELY AFTER APPLICATION USING MULCH ANCHORING TOOL OR APPROVED SYNTHETIC BINDER AT RATE SPECIFIED BY MANUFACTURER.

PERMANENT SEEDING SUMMARY

NO.	SPECIES	APPLICATION (LB/AC - LB/1000 SF)	SEEDING DATES	SEEDING DEPTHS	FERTILIZER RATE (10-20-20)			LIME RATE
HARDINESS ZONE: 7B SEED MIXTURE: TABLE B-3, MIXTURE #9								
9	TALL FESCUE (COYOTE, GENESIS, LANCER)	60	FEB 15 - APR 30; AUG 15 - OCT 30	0.25 - 0.5 IN	45 LB/AC (1 LB/ 1000 SF)	90 LB/AC (1 LB/ 1000 SF)	90 LB/AC (1 LB/ 1000 SF)	2 TONS/AC (90 LB/ 1000SF)
	KENTUCKY BLUEGRASS (AMERICA, FREEDOM, MIDNIGHT)	40		0.25 - 0.5 IN				
	PERENNIAL RYE GRASS (PENNFINE)	20		0.25 - 0.5 IN				

APPLY UREA FORM FERTILIZER (46-0-0) AT 150 LB/AC (3.5 LB/1000 SF) AT THE TIME OF SEEDING IN ADDITION TO SOIL AMENDMENTS SHOW ABOVE.

APPLY STRAW MULCH AT 2 TONS PER ACRE (90 LB/1000 SF) OR WOOD CELLULOSE FIBER AT 1500 LB/ACRE (35 LBS/1000 SF) IMMEDIATELY AFTER SEEDING, ANCHOR MULCH IMMEDIATELY AFTER APPLICATION USING MULCH ANCHORING TOOL OR APPROVED SYNTHETIC BINDER AT RATE SPECIFIED BY MANUFACTURER.

SEQUENCE OF CONSTRUCTION - EROSION AND SEDIMENT CONTROL

1. OBTAIN PROPER PERMITS AND CONTACT MISS UTILITY (1-800-257-7777) AT LEAST 24 HOURS PRIOR TO BEGINNING WORK.
2. IT IS ANTICIPATED THAT A WATER APPROPRIATION PERMIT WILL BE REQUIRED. CONTRACTOR SHALL ABIDE BY ALL THE REQUIREMENT SET FORTH BY THIS PERMIT.
3. THE CONTRACTOR MUST CONTACT THE WORCESTER COUNTY DEPARTMENT OF ENVIRONMENTAL PROGRAMS AT 410-632-1220 TO SCHEDULE A PRE-CONSTRUCTION MEETING AT LEAST 48 HOURS PRIOR TO COMMENCING ANY SITE WORK. FAILURE TO DO SO MAY RESULT IN AN IMMEDIATE "STOP WORK" ORDER.
4. THE OWNER AND/OR THEIR REPRESENTATIVE SHALL CONTACT WORCESTER COUNTY ENVIRONMENTAL PROGRAMS AT THE FOLLOWING STAGES OF CONSTRUCTION:
 4.1. PRIOR TO EARTH DISTURBANCE
 4.2. UPON COMPLETION OF THE INSTALLATION OF PERIMETER EROSION AND SEDIMETN CONTROLS, BUT BEFORE PROCEEDING WITH ANY OTHER EARTH DISTURBANCE OR GRADING
 4.3. PRIOR TO THE START OF A PHASE OF CONSTRUCTION
 4.4. PRIOR TO THE REMOVAL OF THE SEDIMENT CONTROL PRACTICES
5. CLEAR AND GRUB FOR THE INSTALLATION OF PERIMETER EROSION AND SEDIMENT CONTROLS AND STABILIZED CONSTRUCTION ENTRANCE.

GRAVITY SEWER INSTALLATION:

1. INSTALL DEWATERING EQUIPMENT IN ACCORDANCE WITH THE CONTRACTOR SECURED WATER APPROPRIATION PERMIT.
2. LIMIT OPEN CUT EXCAVATION TO WHAT CAN BE INSTALLED AND BACKFILLED/RESTORED IN ONE WORKING DAY.
3. INSTALL GRAVITY SEWER, CLEANOUTS, FITTINGS, STRUCTURES, AND APPURTENANCES AS SHOWN ON PLANS.
4. PROVIDE CR-6 AGGREGATE TO FINISHED GRADE FOR COMPLETED SECTIONS OF INSTALLATIONS, AND PROVIDE STEEL PLATING WITH TRAFFIC CONTROL SIGNAGE FOR ACTIVE EXCAVATIONS TO ALLOW TRAFFIC TO TRAVERSE THE PROJECT DURING NON-WORK HOURS.
5. PROVIDE TEMPORARY AND FINAL STABILIZATION FOR ALL DISTURBED AREAS INCLUDING THE TRENCH, GRASS SHOULDERS, EQUIPMENT TRAFFIC WITHIN DISTURBED AREAS.

FORCEMAIN TRANSMISSION PIPE ROUTE - LEWIS ROAD TO EXISTING CONNECTION POINT AND ALONG PORTIONS OF WHITETAIL LANE

1. INSTALL FORCEMAIN, E-ONE SIMPLEX PUMP STATIONS, AND ALL APPURTENANCES VIA OPEN CUT OR DIRECTIONAL DRILL AT THE CONTRACTOR'S DISCRETION AND WITH THE APPROVAL OF THE OWNER AND ENGINEER.
2. LIMIT OPEN CUT EXCAVATION TO WHAT CAN BE INSTALLED AND BACKFILLED/RESTORED IN ONE WORKING DAY.
3. PERFORM THE TIE-IN CONNECTION OF THE EXISTING FORCEMAIN TO THE EXISTING WET WELL AT THE LANDINGS WASTEWATER TREATMENT PLANT.
4. PROVIDE TEMPORARY AND FINAL STABILIZATION FOR ALL DISTURBED AREAS INCLUDING THE TRENCH, DIRECTIONAL DRILLING AND RECEIVING AREAS, AND EQUIPMENT TRAFFIC AS NECESSARY.

PUMP STATION SITE

1. INSTALL STABILIZED CONSTRUCTION ENTRANCE AND CULVERT PIPE ALONG LEWIS ROAD AS SHOWN ON THE PLANS.
2. INSTALL PERIMETER CONTROLS.
3. CONTINUATION OF DEWATERING AS NEEDED AND PER WATER APPROPRIATE PERMIT REQUIREMENTS.
4. CLEAR AND REMOVE TREES TO LIMITS SHOWN ON THE PLANS. REPAIR DAMAGE SEDIMENT CONTROLS.
5. CLEAR AND GRUB SITE.
6. START EXCAVATIONS FOR INSTALLATION OF THE WET WELL.
7. INSTALL WET WELL, PIPE CONNECTIONS AND VALVE VAULT.
8. CONTACT SERVICE PROVIDER TO OBTAIN SERVICE AND INSTALLED SERVICE FEED TO THE PUMP STATION SITE.
9. INSTALL ALL PUMPS, PIPING, VALVES, FLOW METER, AND APPURTENANCES.
10. CONNECT 4" DUCTILE IRON PUMP STATION FORCEMAIN TO PREVIOUSLY INSTALLED 4" HDPE SDR-11 TRANSMISSION FORCEMAIN.
11. INSTALL ALL ELECTRICAL, POWER, AND SCADA COMPONENTS OF THE PUMP STATION.
12. INSTALL THE PERIMETER CONCRETE PADS, FENCE AND GRAVEL ACCESS DRIVEWAY.
13. CONNECT POWER TO THE SYSTEM AND PERFORM COMMISSIONING OF THE SYSTEM.
14. INSTALL STORMWATER MANAGEMENT FACILITY
 14.1. PERFORM EXCAVATION OF THE RAIN GARDEN.
 14.2. REQUEST INSPECTION OF SUBGRADE AND PERFORM INFILTRATION RATE CONFIRMATION
 14.3. PERFORM BACKFILL OF FACILITY WITH APPROVED PLANTING MEDIA AND MULCH. THE CONTRACTOR SHALL BE CAREFUL NOT TO OVERLY COMPACT THE PLANTING MEDIA.
 14.4. REQUEST INSPECTION OF PLANTING MEDIA INSTALLATION
 14.5. PERFORM FINAL FINE GRADING OF FACILITY AND OUTFALL.
 14.6. PLACE STONE OUTLET PROTECTION.
 14.7. PERFORM PLANTINGS AND REQUEST FINAL INSPECTION.
15. FOLLOWING INITIAL DISTURBANCE, PERMANENT AND TEMPORARY STABILIZATION SHALL BE COMPLETED WITHIN THREE (3) CALENDAR DAYS ON ALL PERIMETER CONTROLS AND SLOPES GREATER THAN 3H:1V AND SEVEN (7) CALENDAR DAYS ON ALL OTHER DISTURBED AREAS ON THE SITE.
16. EROSION AND SEDIMENT CONTROL MEASURES SHALL REMAIN IN PLACE UNTIL THE SEDIMENT CONTROL INSPECTOR HAS APPROVED OF THEIR REMOVAL.
17. REMOVE EROSION AND SEDIMENT CONTROL MEASURES, PERFORMING FINAL STABILIZATION ON AREAS DISTURBED BY THEIR REMOVAL.
18. REMOVE TRASH AND DEBRIS FROM THE SITE.

LIMIT OF DISTURBANCE: 84,815 S.F. (1.95 AC.)
ESTIMATED EARTHWORK:
CUT: 10,000 CUBIC YARDS
FILL: 10,000 CUBIC YARDS
NET: 0 CUBIC YARDS

GENERAL EROSION AND SEDIMENT CONTROL NOTES

1. THE CONTRACTOR WILL COMPLY WITH ALL REQUIREMENT OF SEDIMENT AND EROSION CONTROL AS SET FORTH IN THE 2011 MARYLAND STANDARDS FOR EROSION AND SEDIMENT CONTROL, AND THE CONTRACT SPECIFICATIONS.
2. INITIAL DISTURBANCE WILL BE LIMITED TO THAT NECESSARY TO GAIN ENTRANCE TO THE SITE AND INSTALLED NECESSARY SEDIMENT CONTROLS AS PER THE APPROVED PLANS.
3. ALL EXCAVATED MATERIAL SHALL BE PLACED ON THE HIGH SIDE WHENEVER POSSIBLE AND CONFINED TO AN AREA WHERE IT WILL NOT OBSTRUCT THE NORMAL COURSE OF DRAINAGE.
4. CONTINUOUS INSPECTION AND MAINTENANCE OF ALL SEDIMENT CONTROL DEVICES IS MANDATORY.
5. ANY SEDIMENT CONTROL DEVICES DISTURBED DURING CONSTRUCTION MUST BE RESTORED IMMEDIATELY.
6. ALL POINTS OF INGRESS AND EGRESS SHALL BE PROTECTED TO MINIMIZE TRACKING OF MUD ONTO PUBLIC RIGHTS-OF-WAY.
7. ANY EARTH, GRAVEL AND/OR OTHER MATERIAL TRACKED, SPILLED, OR WASHED ONTO ADJACENT ROADS MUST BE IMMEDIATELY REMOVED AND DISPOSED OF IN A PROPER MANNER. FLUSHING WILL NOT BE PERMITTED. ALL MATERIAL MUST BE REMOVED BY MEANS OF SHOVELING AND SWEEPING.
8. VEGETATIVE STABILIZATION SHALL BE IN ACCORDANCE WITH THE NOTES AND SEEDING SUMMARIES.
9. THE APPROVED PLANS REMAIN VALID FOR 3 YEARS FROM THE DATE OF APPROVAL UNLESS SPECIFICALLY EXTENDED OR RENEWED BY THE APPROVAL AUTHORITY
10. MARYLAND DEPARTMENT OF THE ENVIRONMENT NOTICE OF INTENT (NOI) GENERAL PERMIT FOR CONSTRUCTION ACTIVITY IS REQUIRED FOR ALL CONSTRUCTION ACTIVITY IN MARYLAND WITH A PLANNED TOTAL DISTURBANCE OF 1 ACRE OR MORE.
11. FOR NOI COMPLIANCE, AN INSPECTION MUST BE PERFORMED ONSITE OF ALL SEDIMENT CONTROLS ON A WEEKLY BASIS AND AFTER EVERY RAINFALL EVENT. ALL SELF INSPECTIONS MUST BE MAINTAINED ALONG WITH ALL APPLICABLE GOVERNING AGENCY INSPECTION REPORTS IN A LOG BOOKS, TO BE KEPT ONSITE AT ALL TIME.

STANDARD STABILIZATION NOTE:

a. THREE (3) CALENDAR DAYS AS TO THE SURFACE OF ALL PERIMETER DIKES, SWALES, DITCHES, PERIMETER SLOPES, AND ALL SLOPES STEEPER THAN 3 HORIZONTAL AND 1 VERTICAL. (3:1).
b. SEVEN (7) CALENDAR DAYS AS TO ALL OTHER DISTURBED OR GRADED AREAS ON THE PROJECT SITE NOT UNDER ACTIVE GRADING.

REVISIONS

NO.	DATE	BY	DESCRIPTION

DESIGN INFORMATION

DESIGNED BY:	DRAWN BY:	CHECKED BY:	PROJECT MANAGER:
SCL/NWH	SCL/NWH	AS/DOK	SCL

PROFESSIONAL CERTIFICATION. I HEREBY CERTIFY THAT THESE DOCUMENTS WERE PREPARED OR APPROVED BY ME, AND THAT I AM A DULY LICENSED PROFESSIONAL ENGINEER UNDER THE LAWS OF THE STATE OF MARYLAND, LICENSE NO. 55422 EXPIRATION DATE: DECEMBER 16, 2023

SEAL

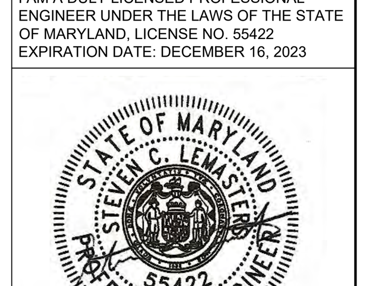

WORCESTER COUNTY DEPARTMENT OF PUBLIC WORKS
LEWIS ROAD GRAVITY SEWER SYSTEM AND PUMP STATION

WORCESTER COUNTY, MARYLAND

EROSION AND SEDIMENT CONTROL NOTES

EA Engineering, Science, and Technology, Inc., PBC
11200 Racetrack Road, Unit A101
Ocean Pines, Maryland 21811
(410) 641-5341
www.eaest.com

SCALE AS SHOWN

FULL SIZE PLOT: 24" x 36"

DATE: SEPTEMBER 2023

PROJECT NUMBER: 6250909

C-701

100% PLANS - NOT FOR CONSTRUCTION

FILE PATH: \\OCEANPINES\PROJECTS\DOCS\WORCESTER COUNTY\6250909 - LEWIS ROAD SEWER CONNECTION\CAD\PRODUCTION\DESIGN SET\C-701 ESC NOTES AND DETAILS SHEETS.DWG [C-701] LEMASTERS, STEVEN 10/24/2024 12:08 PM

DETAIL B-1 STABILIZED CONSTRUCTION ENTRANCE

STANDARD SYMBOL SCE

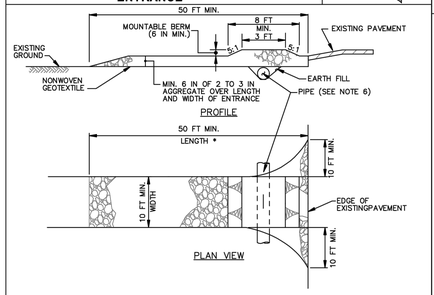

CONSTRUCTION SPECIFICATIONS

1. PLACE STABILIZED CONSTRUCTION ENTRANCE IN ACCORDANCE WITH THE APPROVED PLAN. VEHICLES MUST TRAVEL OVER THE ENTIRE LENGTH OF THE SCE. USE MINIMUM LENGTH OF 50 FEET (*30 FEET FOR SINGLE RESIDENCE LOT). USE MINIMUM WIDTH OF 10 FEET. FLARE SCE 10 FEET MINIMUM AT THE EXISTING ROAD TO PROVIDE A TURNING RADIUS.
2. PIPE ALL SURFACE WATER FLOWING TO OR DIVERTED TOWARD THE SCE UNDER THE ENTRANCE, MAINTAINING POSITIVE DRAINAGE. PROTECT PIPE INSTALLED THROUGH THE SCE WITH A MOUNTABLE BERM WITH 5:1 SLOPES AND A MINIMUM OF 12 INCHES OF STONE OVER THE PIPE. PROVIDE PIPE AS SPECIFIED ON APPROVED PLAN. WHEN THE SCE IS LOCATED AT A HIGH SPOT AND HAS NO DRAINAGE TO CONVEY, A PIPE IS NOT NECESSARY. A MOUNTABLE BERM IS REQUIRED WHEN SCE IS NOT LOCATED AT A HIGH SPOT.
3. PREPARE SUBGRADE AND PLACE NONWOVEN GEOTEXTILE, AS SPECIFIED IN SECTION H-1 MATERIALS.
4. PLACE CRUSHED AGGREGATE (2 TO 3 INCHES IN SIZE) OR EQUIVALENT RECYCLED CONCRETE (WITHOUT REBAR) AT LEAST 6 INCHES DEEP OVER THE LENGTH AND WIDTH OF THE SCE.
5. MAINTAIN ENTRANCE IN A CONDITION THAT MINIMIZES TRACKING OF SEDIMENT. ADD STONE OR MAKE OTHER REPAIRS AS CONDITIONS DEMAND TO MAINTAIN CLEAN SURFACE, MOUNTABLE BERM, AND SPECIFIED DIMENSIONS. IMMEDIATELY REMOVE STONE AND/OR SEDIMENT SPILLED, DROPPED, OR TRACKED ONTO ADJACENT ROADWAY BY VACUUMING, SCRAPING, AND/OR SWEEPING. WASHING ROADWAY TO REMOVE MUD TRACKED ONTO PAVEMENT IS NOT ACCEPTABLE UNLESS WASH WATER IS DIRECTED TO AN APPROVED SEDIMENT CONTROL PRACTICE.

MARYLAND STANDARDS AND SPECIFICATIONS FOR SOIL EROSION AND SEDIMENT CONTROL

U.S. DEPARTMENT OF AGRICULTURE NATURAL RESOURCES CONSERVATION SERVICE	2011	MARYLAND DEPARTMENT OF ENVIRONMENT WATER MANAGEMENT ADMINISTRATION

DETAIL E-3 SUPER SILT FENCE

STANDARD SYMBOL —SSF—

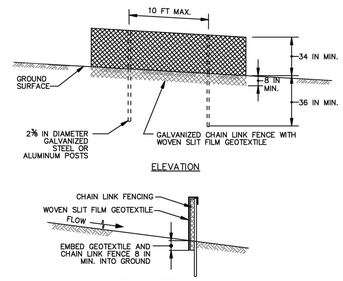

CONSTRUCTION SPECIFICATIONS

1. INSTALL 2⅜ INCH DIAMETER GALVANIZED STEEL POSTS OF 0.095 INCH WALL THICKNESS AND SIX FOOT LENGTH SPACED NO FURTHER THAN 10 FEET APART. DRIVE THE POSTS A MINIMUM OF 36 INCHES INTO THE GROUND.
2. FASTEN 9 GAUGE OR HEAVIER GALVANIZED CHAIN LINK FENCE (2⅜ INCH MAXIMUM OPENING) 42 INCHES IN HEIGHT SECURELY TO THE FENCE POSTS WITH WIRE TIES OR HUG RINGS.
3. FASTEN WOVEN SLIT FILM GEOTEXTILE AS SPECIFIED IN SECTION H-1 MATERIALS, SECURELY TO THE UPSLOPE SIDE OF CHAIN LINK FENCE WITH TIES SPACED EVERY 24 INCHES AT THE TOP AND MID SECTION. EMBED GEOTEXTILE AND CHAIN LINK FENCE A MINIMUM OF 8 INCHES INTO THE GROUND.
4. WHERE ENDS OF THE GEOTEXTILE COME TOGETHER, THE ENDS SHALL BE OVERLAPPED BY 6 INCHES, FOLDED, AND STAPLED TO PREVENT SEDIMENT BY PASS.
5. EXTEND BOTH ENDS OF THE SUPER SILT FENCE A MINIMUM OF FIVE HORIZONTAL FEET UPSLOPE AT 45 DEGREES TO THE MAIN FENCE ALIGNMENT TO PREVENT RUNOFF FROM GOING AROUND THE ENDS OF THE SUPER SILT FENCE.
6. PROVIDE MANUFACTURER CERTIFICATION TO THE INSPECTION/ENFORCEMENT AUTHORITY SHOWING THAT GEOTEXTILE USED MEETS THE REQUIREMENTS IN SECTION H-1 MATERIALS.
7. REMOVE ACCUMULATED SEDIMENT AND DEBRIS WHEN BULGES DEVELOP IN FENCE OR WHEN SEDIMENT REACHES 25% OF FENCE HEIGHT. REPLACE GEOTEXTILE IF TORN. IF UNDERMINING OCCURS, REINSTALL CHAIN LINK FENCING AND GEOTEXTILE.

MARYLAND STANDARDS AND SPECIFICATIONS FOR SOIL EROSION AND SEDIMENT CONTROL

U.S. DEPARTMENT OF AGRICULTURE NATURAL RESOURCES CONSERVATION SERVICE	2011	MARYLAND DEPARTMENT OF ENVIRONMENT WATER MANAGEMENT ADMINISTRATION

DETAIL F-2 SUMP PIT

STANDARD SYMBOL ⊠SP

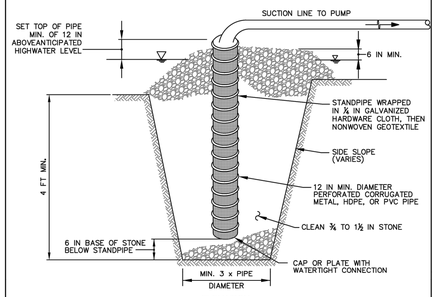

CONSTRUCTION SPECIFICATIONS

1. USE 12 INCH OR LARGER DIAMETER CORRUGATED METAL, HDPE, OR PVC PIPE WITH 1 INCH DIAMETER PERFORATIONS, 6 INCHES ON CENTER. BOTTOM OF PIPE MUST BE CAPPED WITH WATERTIGHT SEAL.
2. WRAP PIPE WITH ¼ INCH GALVANIZED HARDWARE CLOTH AND WRAP NONWOVEN GEOTEXTILE, AS SPECIFIED IN SECTION H-1 MATERIALS, OVER THE HARDWARE CLOTH.
3. EXCAVATE PIT TO THREE TIMES THE PIPE DIAMETER AND FOUR FEET IN DEPTH. PLACE ¾ TO 1½ INCH STONE OR EQUIVALENT RECYCLED CONCRETE, 6 INCHES IN DEPTH PRIOR TO PIPE PLACEMENT.
4. SET TOP OF PIPE MINIMUM 12 INCHES ABOVE ANTICIPATED WATER SURFACE ELEVATION.
5. BACKFILL PIT AROUND THE PIPE WITH ¾ TO 1½ INCH CLEAN STONE OR EQUIVALENT RECYCLED CONCRETE AND EXTEND STONE A MINIMUM OF 6 INCHES ABOVE ANTICIPATED WATER SURFACE ELEVATION.
6. DISCHARGE TO A STABLE AREA AT A NONEROSIVE RATE.
7. A SUMP PIT REQUIRES FREQUENT MAINTENANCE. IF SYSTEM CLOGS, REMOVE PERFORATED PIPE AND REPLACE GEOTEXTILE AND STONE. KEEP POINT OF DISCHARGE FREE OF EROSION.

MARYLAND STANDARDS AND SPECIFICATIONS FOR SOIL EROSION AND SEDIMENT CONTROL

U.S. DEPARTMENT OF AGRICULTURE NATURAL RESOURCES CONSERVATION SERVICE	2011	MARYLAND DEPARTMENT OF ENVIRONMENT WATER MANAGEMENT ADMINISTRATION

DETAIL F-4 FILTER BAG

STANDARD SYMBOL ⊠FB

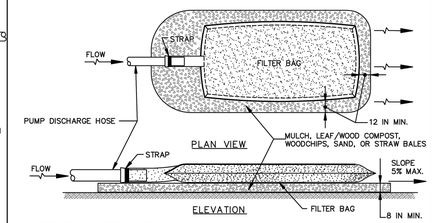

CONSTRUCTION SPECIFICATIONS

1. TIGHTLY SEAL SLEEVE AROUND THE PUMP DISCHARGE HOSE WITH A STRAP OR SIMILAR DEVICE.
2. PLACE FILTER BAG ON SUITABLE BASE (E.G., MULCH, LEAF/WOOD COMPOST, WOODCHIPS, SAND, OR STRAW BALES) LOCATED ON A LEVEL OR 5% MAXIMUM SLOPING SURFACE. DISCHARGE TO A STABILIZED AREA. EXTEND BASE A MINIMUM OF 12 INCHES FROM EDGES OF BAG.
3. CONTROL PUMPING RATE TO PREVENT EXCESSIVE PRESSURE WITHIN THE FILTER BAG IN ACCORDANCE WITH THE MANUFACTURER RECOMMENDATIONS. AS THE BAG FILLS WITH SEDIMENT, REDUCE PUMPING RATE.
4. REMOVE AND PROPERLY DISPOSE OF FILTER BAG UPON COMPLETION OF PUMPING OPERATIONS OR AFTER BAG HAS REACHED CAPACITY, WHICHEVER OCCURS FIRST. SPREAD THE DEWATERED SEDIMENT FROM THE BAG IN AN APPROVED UPLAND AREA AND STABILIZE WITH SEED AND MULCH BY THE END OF THE WORK DAY. RESTORE THE SURFACE AREA BENEATH THE BAG TO ORIGINAL CONDITION UPON REMOVAL OF THE DEVICE.
5. USE NONWOVEN GEOTEXTILE WITH DOUBLE STITCHED SEAMS USING HIGH STRENGTH THREAD. SIZE SLEEVE TO ACCOMMODATE A MAXIMUM 4 INCH DIAMETER PUMP DISCHARGE HOSE. THE BAG MUST BE MANUFACTURED FROM A NONWOVEN GEOTEXTILE THAT MEETS OR EXCEEDS MINIMUM AVERAGE ROLL VALUES (MARV) FOR THE FOLLOWING:

GRAB TENSILE	250 LB	ASTM D-4632
PUNCTURE	150 LB	ASTM D-4833
FLOW RATE	70 GAL/MIN/FT^2	ASTM D-4491
PERMITTIVITY (SEC^{-1})	1.2 SEC^{-1}	ASTM D-4491
UV RESISTANCE	70% STRENGTH @ 500 HOURS	ASTM D-4355
APPARENT OPENING SIZE (AOS)	0.15-0.18 MM	ASTM D-4751
SEAM STRENGTH	90%	ASTM D-4632

6. REPLACE FILTER BAG IF BAG CLOGS OR HAS RIPS, TEARS, OR PUNCTURES. DURING OPERATION KEEP CONNECTION BETWEEN PUMP HOSE AND FILTER BAG WATER TIGHT. REPLACE BEDDING IF IT BECOMES DISPLACED.

MARYLAND STANDARDS AND SPECIFICATIONS FOR SOIL EROSION AND SEDIMENT CONTROL

U.S. DEPARTMENT OF AGRICULTURE NATURAL RESOURCES CONSERVATION SERVICE	2011	MARYLAND DEPARTMENT OF ENVIRONMENT WATER MANAGEMENT ADMINISTRATION

F.9

DETAIL H-4-2 TEMPORARY ACCESS CULVERT

STANDARD SYMBOL

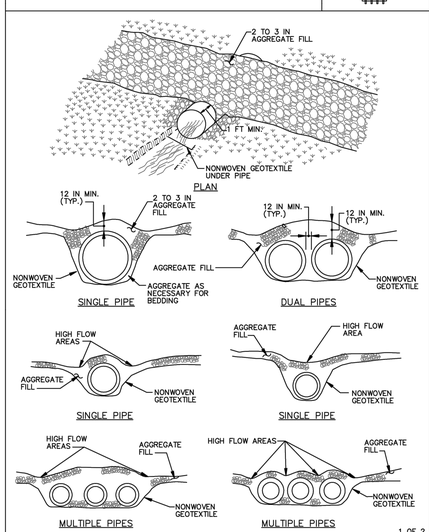

1 OF 2

MARYLAND STANDARDS AND SPECIFICATIONS FOR SOIL EROSION AND SEDIMENT CONTROL

U.S. DEPARTMENT OF AGRICULTURE NATURAL RESOURCES CONSERVATION SERVICE	2011	MARYLAND DEPARTMENT OF ENVIRONMENT WATER MANAGEMENT ADMINISTRATION

DETAIL H-4-2 TEMPORARY ACCESS CULVERT

STANDARD SYMBOL

CONSTRUCTION SPECIFICATIONS

1. CONSTRUCTION OR REMOVAL OF A TEMPORARY ACCESS CULVERT WILL NOT BE PERMITTED DURING THE FOLLOWING PERIODS:

USE I AND IP	MARCH 1 – JUNE 15
USE II	JUNE 1 – SEPTEMBER 30 AND DECEMBER 16 – MARCH 14
USE III AND IIIP	OCTOBER 1 – APRIL 30
USE IV	MARCH 1 – MAY 31
SAV* (ALL FLOWING STREAMS)	APRIL 15 – OCTOBER 15

*SUBMERGED AQUATIC VEGETATION

2. EXTEND THE CULVERT(S) A MINIMUM OF ONE FOOT BEYOND THE UPSTREAM AND DOWNSTREAM TOE OF THE AGGREGATE PLACED AROUND THE CULVERT.
3. PLACE NONWOVEN GEOTEXTILE ON THE STREAM BED AND STREAM BANKS PRIOR TO PLACEMENT OF THE PIPE CULVERT(S) AND AGGREGATE. COVER THE STREAM BED WITH THE GEOTEXTILE AND EXTEND IT A MINIMUM SIX INCHES AND A MAXIMUM OF ONE FOOT BEYOND THE END OF THE CULVERT AND BEDDING MATERIAL. USE NONWOVEN GEOTEXTILE AS SPECIFIED IN SECTION H-1 MATERIALS. GEOTEXTILE REDUCES SETTLEMENT AND IMPROVES CROSSING STABILITY.
4. PLACE CULVERT(S) ON THE NATURAL STREAM BED GRADE TO MINIMIZE INTERFERENCE WITH FISH PASSAGE.
5. COVER THE CULVERT WITH A MINIMUM OF ONE FOOT OF WASHED AGGREGATE. FOR MULTIPLE CULVERTS PROVIDE AT LEAST 12 INCHES OF COMPACTED AGGREGATE FILL BETWEEN CULVERTS.
6. STABILIZE ALL AREAS DISTURBED DURING CULVERT INSTALLATION WITHIN 24 HOURS OF THE DISTURBANCE IN ACCORDANCE WITH STANDARDS FOR PERMANENT STABILIZATION, SECTION B-4-5, OR TEMPORARY STABILIZATION, SECTION B-4-4, AS APPLICABLE.
7. STABILIZE APPROACH TO CROSSING AND KEEP FREE OF EROSION. REPLACE DISPLACED STONE, AND MAINTAIN HIGH FLOW AREAS. REMOVE DEBRIS TRAPPED BY CULVERT. REPLACE DAMAGED PIPE(S). MAINTAIN AREAS ADJACENT TO CROSSING TO CONTINUOUSLY MEET REQUIREMENTS FOR ADEQUATE VEGETATIVE ESTABLISHMENT IN ACCORDANCE WITH SECTION B-4 VEGETATIVE STABILIZATION.
8. AFTER THE TEMPORARY CROSSING IS NO LONGER NEEDED, REMOVE IT WITHIN 14 CALENDAR DAYS. IF SUBJECT TO THE USE DESIGNATION CLOSURE, REMOVE AT THE END OF CLOSURE PERIOD. PROTECT STREAM BANKS DURING CULVERT REMOVAL AND STABILIZE ALL DISTURBED AREAS WITH EROSION CONTROL MATTING. ACCOMPLISH REMOVAL OF THE CULVERT AND CLEAN UP OF THE AREA WITHOUT CONSTRUCTION EQUIPMENT WORKING IN THE WATERWAY CHANNEL. STORE ALL REMOVED MATERIALS IN AN APPROVED STAGING AREA.

2 OF 2

MARYLAND STANDARDS AND SPECIFICATIONS FOR SOIL EROSION AND SEDIMENT CONTROL

U.S. DEPARTMENT OF AGRICULTURE NATURAL RESOURCES CONSERVATION SERVICE	2011	MARYLAND DEPARTMENT OF ENVIRONMENT WATER MANAGEMENT ADMINISTRATION

REVISIONS

NO.	DATE	BY	DESCRIPTION

DESIGN INFORMATION

DESIGNED BY:	DRAWN BY:	CHECKED BY:	PROJECT MANAGER:
SCL/NVH	SCL/NVH	AS/DOK	SCL

PROFESSIONAL CERTIFICATION. I HEREBY CERTIFY THAT THESE DOCUMENTS WERE PREPARED OR APPROVED BY ME, AND THAT I AM A DULY LICENSED PROFESSIONAL ENGINEER UNDER THE LAWS OF THE STATE OF MARYLAND. LICENSE NO. 55422
EXPIRATION DATE: DECEMBER 16, 2023

SEAL

STATE OF MARYLAND · STEVEN C. LEWIS · 55422 · PROFESSIONAL ENGINEER · 09/05/23

WORCESTER COUNTY DEPARTMENT OF PUBLIC WORKS
LEWIS ROAD GRAVITY SEWER SYSTEM AND PUMP STATION

WORCESTER COUNTY, MARYLAND

EROSION AND SEDIMENT CONTROL DETAILS

EA Engineering, Science, and Technology, Inc., PBC
11200 Racetrack Road, Unit A101
Ocean Pines, Maryland 21811
(410) 641-5341
www.eaest.com

SCALE AS SHOWN

FULL SIZE PLOT: 24" x 36"

DATE: SEPTEMBER 2023

PROJECT NUMBER: 6250909

C-702

SHEET: 18 OF 22

100% PLANS - NOT FOR CONSTRUCTION

FILE PATH: \\OCEANPINES\PROJECTS\DOCS\WORCESTER COUNTY\6250909 - LEWIS ROAD SEWER CONNECTION\CAD\PRODUCTION\DESIGN\SET\C-701 ESC NOTES AND DETAILS SHEETS.DWG [C-702] LEWISTERS, STEVEN 10/04/2024 12:08 PM

ABBREVIATIONS

A	AMPERE
AC	ALTERNATING CURRENT
AF	AMPS FRAME
AI	ANALOG INPUT
AL	ALUMINUM
AO	ANALOG OUTPUT
APPROX.	APPROXIMATELY
AT	AMPS TRIP
ATS	AUTOMATIC TRANSFER SWITCH
AST	ABOVEGROUND STORAGE TANK
AWG	AMERICAN WIRE GAGE
BLDG.	BUILDING
CB	CIRCUIT BREAKER
C.E.P.	CONCRETE EQUIPMENT PAD
CFR	CODE OF FEDERAL REGULATIONS
CKT, CIRC.	CIRCUIT
CP, C.P.	CONTROL PANEL
CPT	CONTROL POWER TRANSFORMER
DC	DIRECT CURRENT
DI	DIGITAL INPUT
DIA	DIAMETER
DO	DIGITAL OUTPUT
D.S.	DISCONNECT SWITCH
DWG	DRAWING
ELEC	ELECTRICAL
ENCL.	ENCLOSURE
EX., EXIST	EXISTING
FMU	FUEL MANAGEMENT UNIT
G	GREEN OR GROUNDING CONDUCTOR
GRD	GROUND
HOA	HAND-OFF-AUTOMATIC
HZ	HERTZ
JB, JB-()	JUNCTION BOX OR JUNCTION BOX WITH DESIGNATION
KCMIL	KILO (THOUSAND) CIRCULAR MILS
KVA	KILOVOLT AMPERE
KW	KILOWATT
LP	LIGHTING PANELBOARD
M-()	MOTOR STARTER COIL WITH DESIGNATION
MAX	MAXIMUM
MCM	THOUSAND CIRCULAR MILS
MIN.	MINIMUM
MTG	MOUNTING
NEC	NATIONAL ELECTRICAL CODE
NEMA	NATIONAL ELECTRICAL MANUFACTURERS ASSOCIATION
NFPA	NATIONAL FIRE PROTECTION ASSOCIATION
NFSS	NON-FUSED SAFETY SWITCH
NO.	NUMBER
NTS	NOT TO SCALE
OL	OVERLOAD
PF-()	POWER FEEDER WITH SOURCE DESIGNATION AND CIRCUIT DESIGNATION
PH	PHASE
PP-()	POWER PANELBOARD
PT	POTENTIAL TRANSFORMER
P-()	PUMP WITH DESIGNATION
QTY	QUANTITY
SDBC	SOFT DRAWN BARE COPPER
S.E.	SERVICE ENTRANCE
SH	SHIELDED
SN	SWITCHED NEUTRAL
SP	SURGE PROTECTOR
S.S.	STAINLESS STEEL
STP	SUBMERSIBLE TURBINE PUMP
SYS.	SYSTEM
T-()	TRANSFORMER WITH DESIGNATION
TB-()	TERMINAL BOX WITH DESIGNATION
TSP	TWISTED SHIELDED PAIR
TYP.	TYPICAL
UST	UNDERGROUND STORAGE TANK
UTIL.	UTILITY
V	VOLT
VAC	VOLTS ALTERNATING CURRENT
VFD	VARIABLE FREQUENCY DRIVE
WWTP	WASTEWATER TREATMENT PLANT
W/	WITH
XFM	TRANSFORMER

LEGEND - PLANS & DETAILS

DESCRIPTION	SYMBOL
CONDUIT EXPOSED	
CONDUIT CONCEALED	
CONDUIT DOWN	
CONDUIT UP	
CONDUIT CONTINUATION / BREAK LINE	
CONDUIT BODY	©
JUNCTION BOX	J
GROUND GRID	
GROUND ROD	
GROUND TEST WELL	
UNDERGROUND DUCT BANK	
HEAT TRACE CABLE	
AUDIO/VISUAL ALARM	
MOTOR	M
SOLENOID VALVE	S
LIQUID LEVEL SENSOR	F
LEVEL ELEMENT	LE
FLOW ELEMENT	FE
FLOAT SWITCH	F
LIMIT SWITCH	ZS
TERMINAL BOX	TB
DISCONNECT SWITCH - NON-FUSED	
DISCONNECT SWITCH - FUSED	F
ELECTRICAL UTILITY PAD MOUNTED TRANSFORMER	TR
CIRCUIT CONNECTION	
ANTENNA	
SANITARY SEWER - FORCEMAIN	FM FM
SANITARY SEWER - GRAVITY	SS SS
EXISTING STORM DRAIN UTILITY	SD SD
STORM DRAIN LINE	SD SD
EXISTING WATER UTILITY	W W
WATER LINE	W W
EQUIPMENT TO BE REMOVED	
CODED NOTE	?
GROUP OF ITEMS	}
DUCT BANK SECTION MARKER	DB #
HOME RUN TO PANELBOARD	LP#-# OR PP#-#

LEGEND - DIAGRAMS & ELEMENTARIES

DESCRIPTION	SYMBOL
CIRCUIT CONNECTION	
CIRCUIT LUG / SCREW CONNECTION	
CIRCUIT CONTINUATION / BREAK LINE	
CIRCUIT BREAKER	
FUSE	
GROUND	
OVERLOAD	
RELAY CONTACT	
SINGLE SWITCH	
MOMENTARY PUSHBUTTON	
LIMIT SWITCH	
PRESSURE SWITCH	
FLOAT SWITCH	
TEMPERATURE SWITCH	
TIMING RELAY	
RELAY COIL	CR
INDICATING LIGHT	
INDICATING LIGHT - PUSH-TO-TEST	
REMOTE CONTACT	
REMOTE INSTRUMENTATION SIGNAL	~

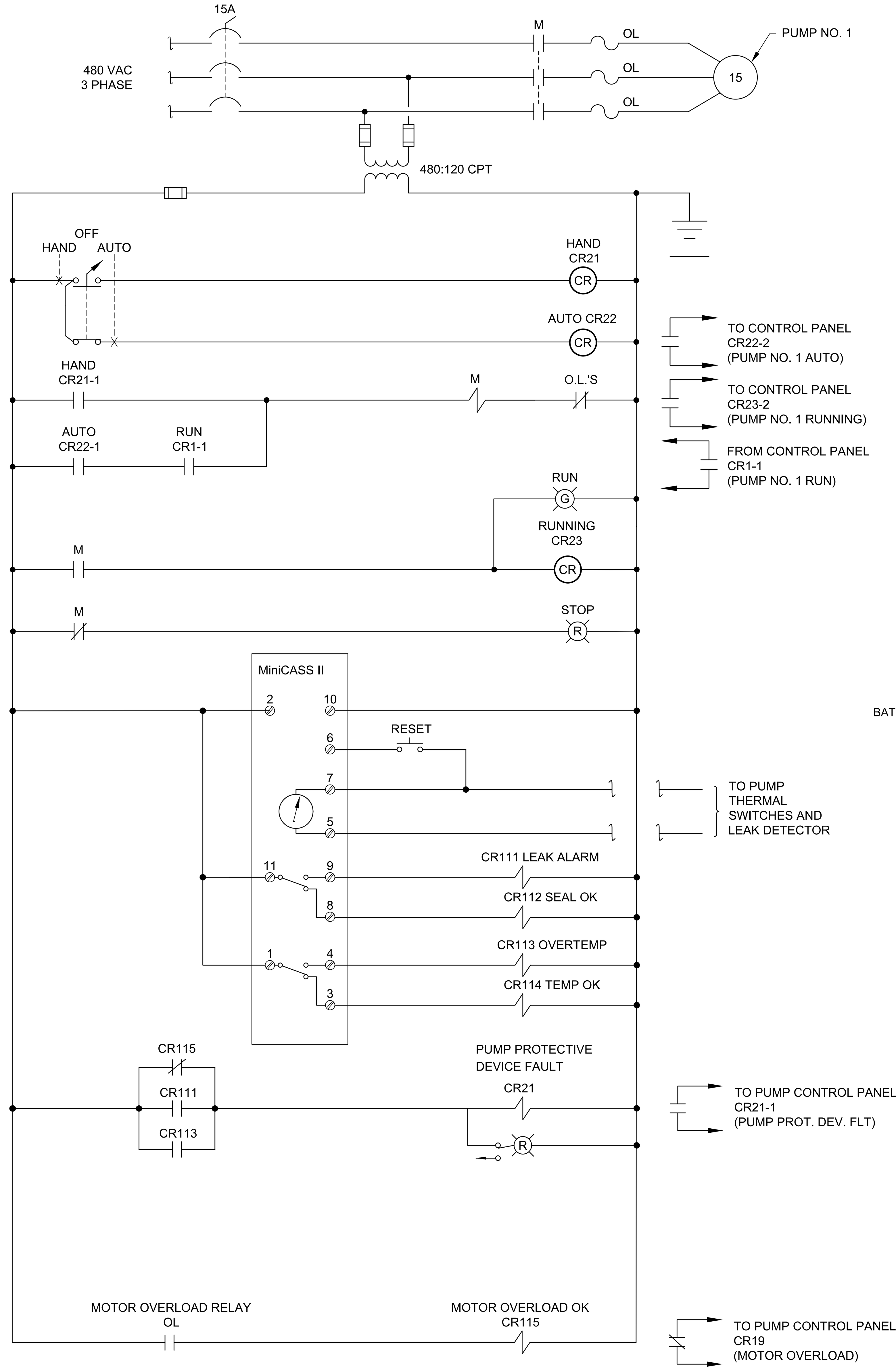

PUMP NO. 1 ELEMENTARY
NOT TO SCALE

NOTES

1. ELEMENTARY FOR PUMP NO. 1 SHOWN. ELEMENTARY FOR PUMP NO. 2 SIMILAR, EXCEPT SUBSTITUTE CR24 FOR CR21, CR25 FOR CR22, CR26 FOR CR23, AND CR2 FOR CR1.
2. ALSO FOR ELEMENTARY PUMP NO. 2, SUBSTITUTE CR211, 212, 213, 214, AND 215 FOR CR111, 112, 113, 114, AND115.

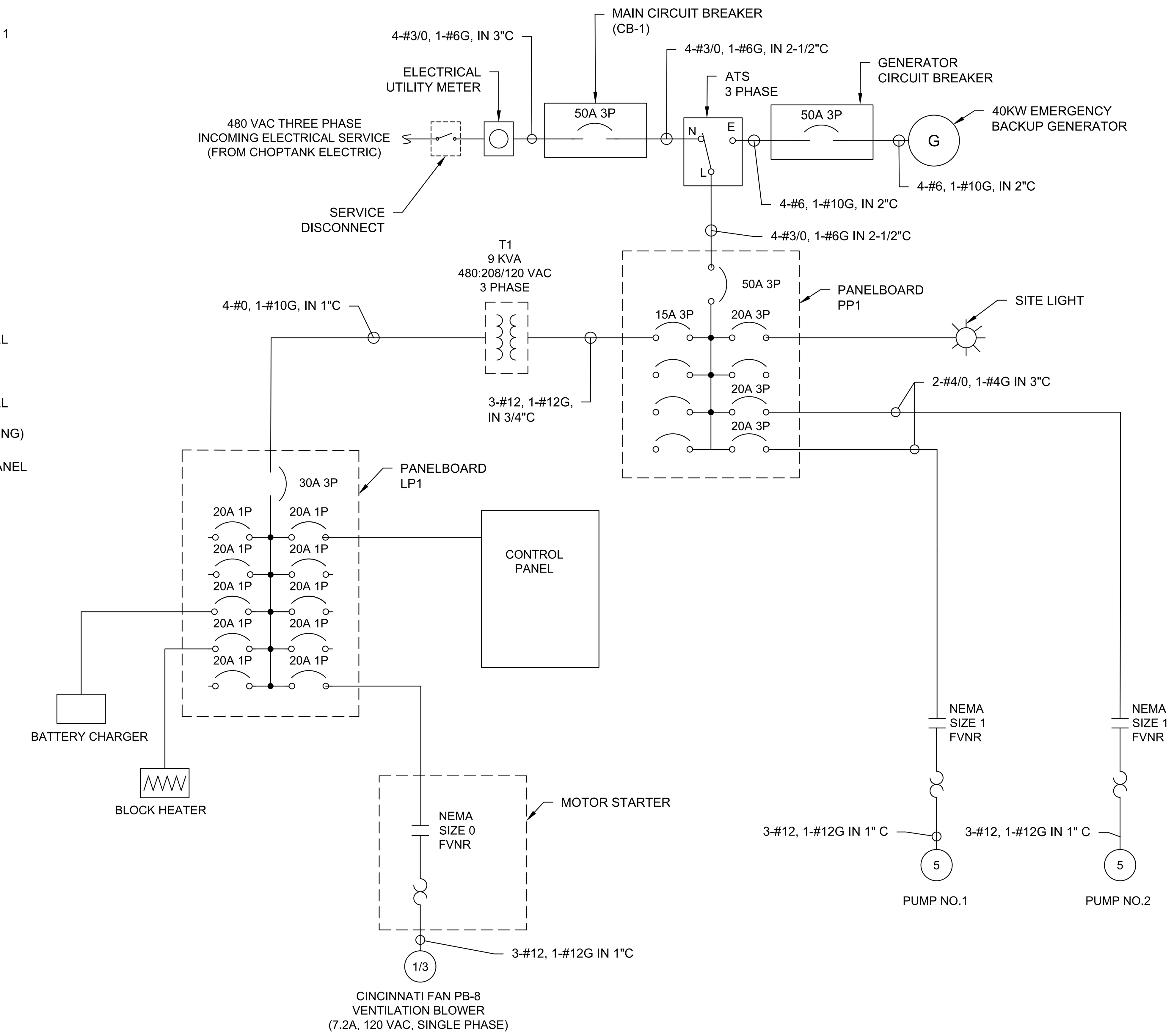

ONE-LINE DIAGRAM
NOT TO SCALE

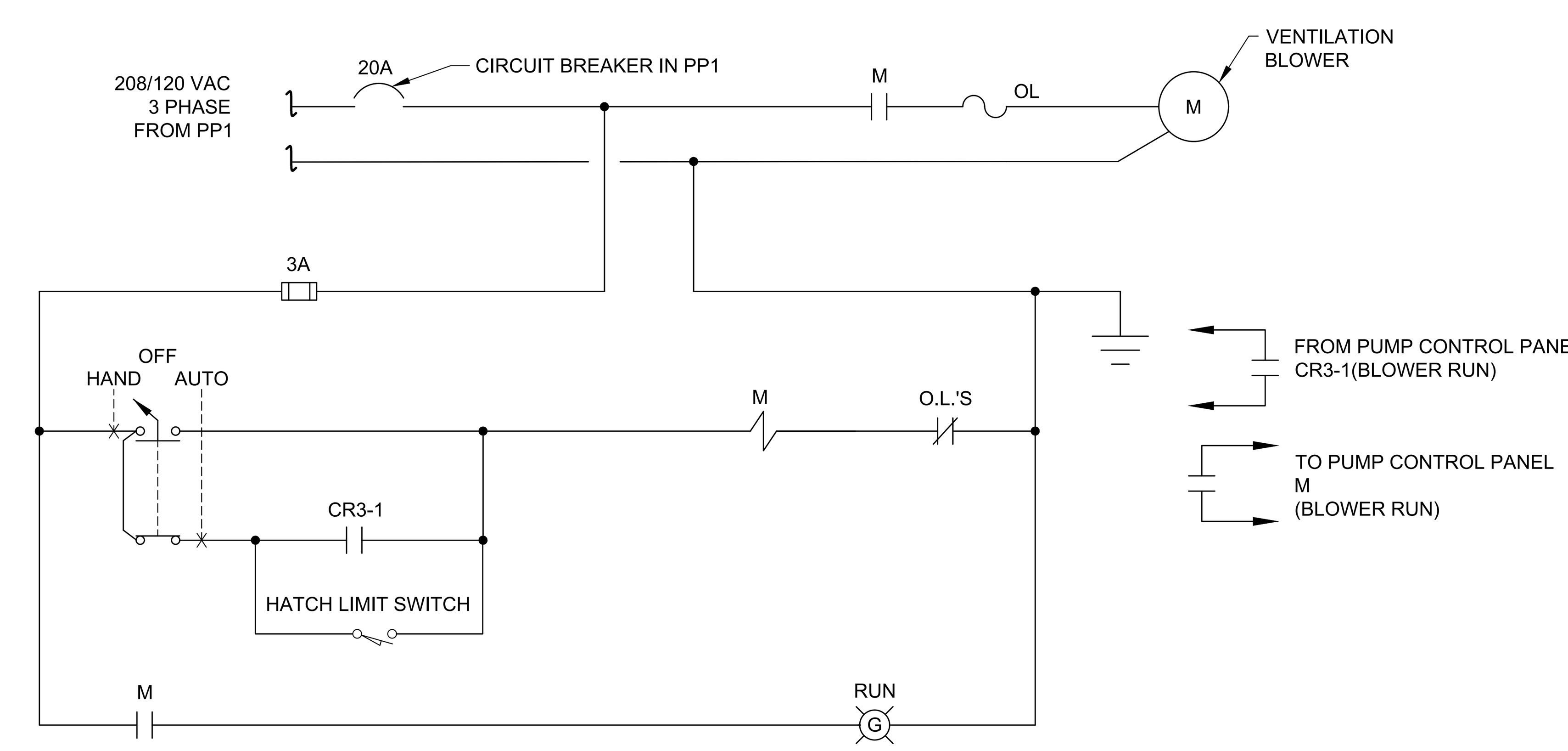

VENTILATION BLOWER ELEMENTARY
NOT TO SCALE

GENERAL NOTES:

1. ALL WORK IS NEW UNLESS OTHERWISE NOTED AS EXISTING. FOR THE CONVENIENCE OF THE CONTRACTOR, ON DRAWINGS WHICH CONTAIN NEW AND EXISTING FEATURES, A DISTINCTION BETWEEN NEW AND EXISTING MATERIALS, EQUIPMENT, AND STRUCTURES HAS BEEN MADE BY LINE WEIGHT. HEAVY LINE WEIGHT REPRESENTS NEW FEATURES (OR WORK TO BE DONE ON EXISTING FEATURES) AND LIGHT LINE WEIGHT REPRESENTS EXISTING FEATURES.
2. INFORMATION FOR EXISTING UTILITIES IS FROM AVAILABLE RECORDS AND SHALL BE VERIFIED BY THE CONTRACTOR TO HIS OR HER SATISFACTION PRIOR TO CONSTRUCTION ACTIVITIES. CONTRACTOR SHALL TAKE PRECAUTIONS TO PROTECT EXISTING UTILITIES AND STRUCTURES AND ANY DAMAGE TO THEM SHALL BE REPAIRED IMMEDIATELY (WITHIN 24 HOURS) BY THE CONTRACTOR AT NO COST TO THE OWNER.
3. MATERIALS, DEVICES, APPLIANCES, FITTINGS, AND EQUIPMENT INSTALLED SHALL BE LISTED. ALL PRODUCTS SHALL BE USED ONLY IN THE MANNER IN WHICH THEY HAVE BEEN TESTED AND FOUND SUITABLE FOR THE INTENDED USE.
4. EQUIPMENT AND SYSTEMS SHALL BE BONDED AND GROUNDED IN ACCORDANCE WITH ARTICLE 250 OF THE NATIONAL ELECTRICAL CODE, APPLICABLE LOCAL CODES, THE ELECTRICAL UTILITY PROVIDER, AND THE MANUFACTURER'S RECOMMENDATIONS.
5. CONDUIT AND CONDUCTOR SIZES ARE BASED ON COPPER CONDUCTORS UNLESS SPECIFICALLY NOTED OTHERWISE.
6. VOLTAGE DROP CALCULATIONS ARE BASED ON CIRCUIT LOADS AND DISTANCES FOR THE CIRCUIT ROUTING AS SHOWN. IF ALTERNATE CIRCUIT ROUTING, LOADING, OR CONDUCTOR MATERIAL ARE USED, VERIFY THAT THE VOLTAGE DROP IS ACCEPTABLE.
7. UNLESS OTHERWISE NOTED, CONDUCTORS HAVE NOT BEEN DERATED FOR BUNDLING OF CONDUCTORS, OR SIZED FOR MULTIPLE CIRCUITS. IF MULTIPLE CIRCUITS ARE INSTALLED IN A SINGLE RACEWAY, DERATE THE CONDUCTOR AMPACITY IN ACCORDANCE WITH THE NATIONAL ELECTRICAL CODE, AND PROVIDE THE CORRECT CONDUCTOR AND CONDUIT SIZES.
8. THE CONSTRUCTION CODE REQUIREMENTS OF STATE, COUNTY, OR OTHER POLITICAL SUBDIVISION WHICH EXCEED THE REQUIREMENTS OF NATIONAL CODES, STANDARDS, AND APPROVING BODIES SHALL BE MET AND COMPLIED WITH.
9. THE INSTALLATION OF ALL EQUIPMENT SHALL BE IN ACCORDANCE WITH THE MANUFACTURER'S RECOMMENDATIONS, REQUIREMENTS, AND GUIDELINES AND SHALL CONFORM TO THE PARTICULAR APPLICATION INVOLVED, IN ACCORDANCE WITH DETAILS SHOWN ON THE DRAWINGS. INSTALLATION OF EQUIPMENT CONNECTIONS TO EQUIPMENT SHALL BE COMPLETE IN EVERY DETAIL IN ACCORDANCE WITH APPLICABLE AND ACCEPTED INDUSTRY STANDARDS AND PRACTICES. PRIOR TO ACCEPTANCE OF ALL OR ANY PART OF THE WORK, THE CONTRACTOR SHALL TEST EACH PIECE OF EQUIPMENT AND SUBMIT WRITTEN CERTIFICATION THAT IT HAS BEEN INSTALLED IN ACCORDANCE WITH THE MANUFACTURER'S REQUIREMENTS AND IS READY TO BEGIN OPERATION.
10. MANUFACTURERS AND EQUIPMENT MODEL NUMBERS IDENTIFIED WITH THE DRAWINGS AND/OR SPECIFICATIONS REPRESENT THE BASIS OF DESIGN. AS A PART OF THE SUBMITTAL PROCESS DETAILED IN THE SPECIFICATIONS, THE CONTRACTOR MAY SUBMIT IN WRITING TO THE OWNER AND ENGINEER REQUESTS FOR APPROVED EQUALS.

REVISIONS

NO.	DATE	BY	DESCRIPTION
1	2024/09/25	NWH	REVISED PER USDA COMMENTS

DESIGN INFORMATION
DESIGNED BY: DY/NWH
DRAWN BY: NWH
CHECKED BY: AS/DOK
PROJECT MANAGER: SCL

PROFESSIONAL CERTIFICATION. I HEREBY CERTIFY THAT THESE DOCUMENTS WERE PREPARED OR APPROVED BY ME, AND THAT I AM A DULY LICENSED PROFESSIONAL ENGINEER UNDER THE LAWS OF THE STATE OF MARYLAND, LICENSE NO. 20812 EXPIRATION DATE: APRIL 24, 2025

SEAL
STATE OF MARYLAND ★ DANIEL T. YUE ★ No. 20812 ★ PROFESSIONAL ENGINEER

WORCESTER COUNTY DEPARTMENT OF PUBLIC WORKS
LEWIS ROAD GRAVITY SEWER SYSTEM AND PUMP STATION

WORCESTER COUNTY, MARYLAND

ONE-LINE DIAGRAM AND ABBREVIATIONS

EA Engineering, Science, and Technology, Inc., PBC
11200 Racetrack Road, Unit A101
Ocean Pines, Maryland 21811
(410) 641-5341
www.eaest.com

0 2' 4' 8'
GRAPHIC SCALE IN FEET

FULL SIZE PLOT: 24" x 36"

DATE: AUGUST 2023

PROJECT NUMBER: 6250909

E-101

90% PLANS - NOT FOR CONSTRUCTION

FILE PATH: \\OCEANPINES\PROJECTS\DOCS\WORCESTER COUNTY\6250909 - LEWIS ROAD SEWER CONNECTION\CAD\PRODUCTION\DESIGN SET\E-100 ELECTRICAL PLANS.DWG [E-101] LEMASTERS, STEVEN 10/24/2024 9:56 AM

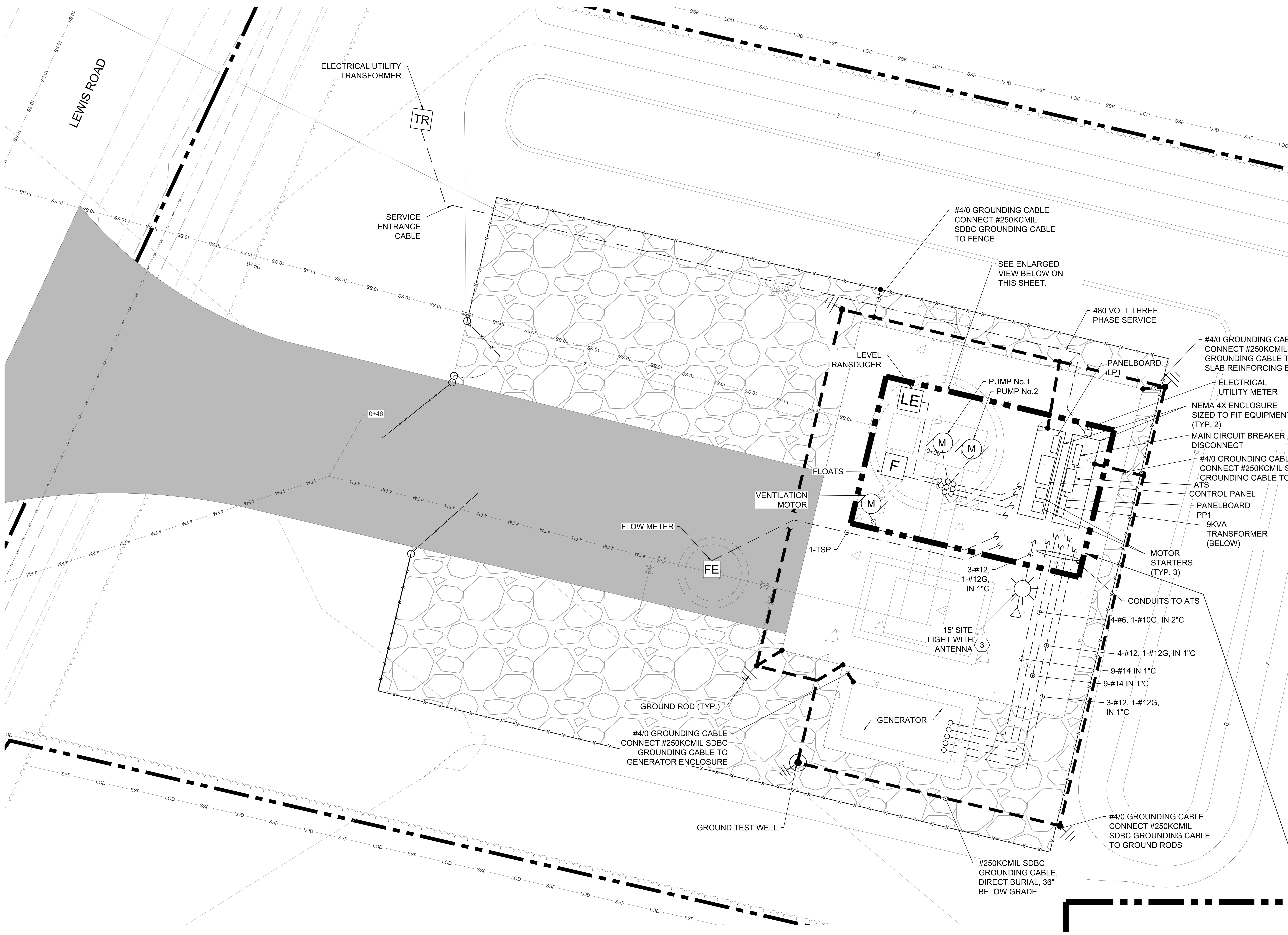

ELECTRICAL SITE PLAN
SCALE: 1" = 4'

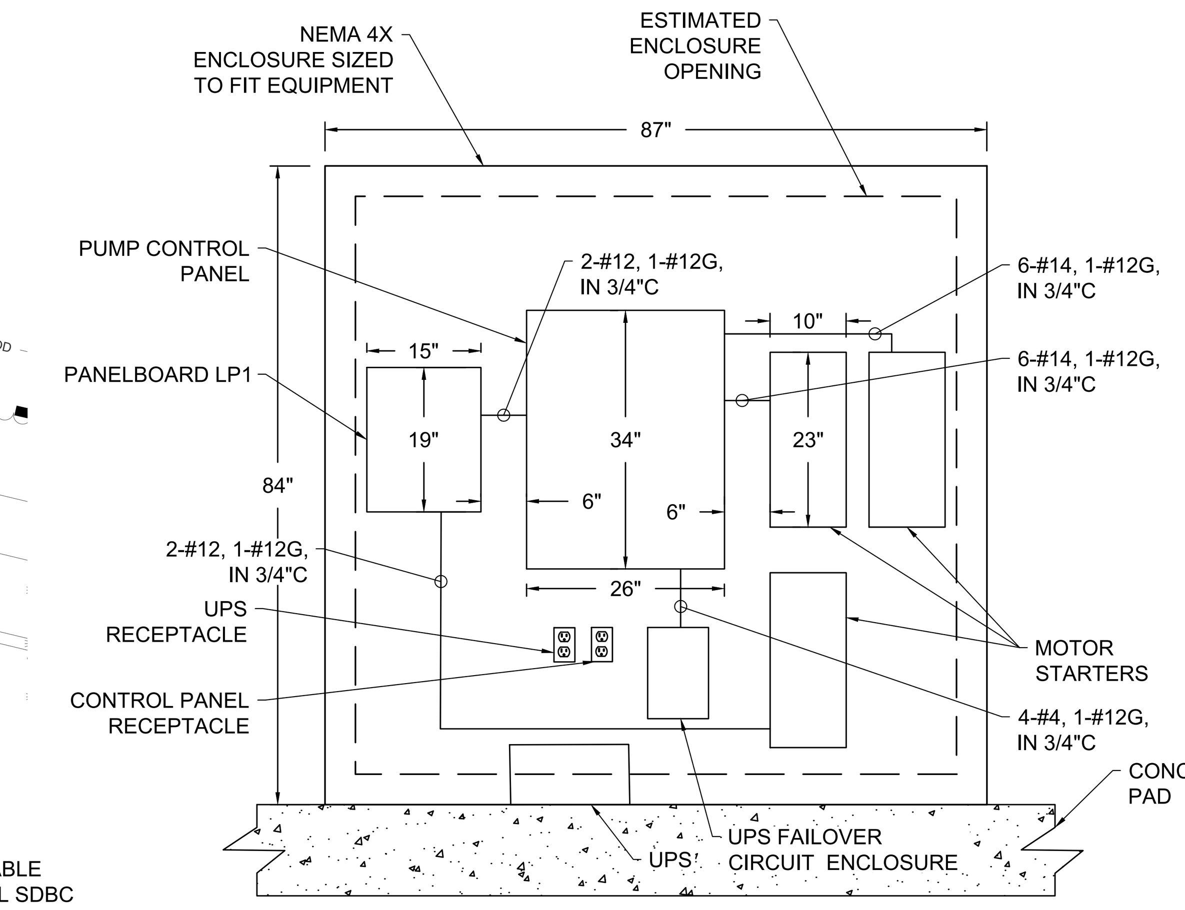

EQUIPMENT ENCLOSURE- WEST ELEVATION
NOT TO SCALE

NOTES:
1. NOT ALL CONDUITS ARE SHOWN FOR PLAN CLARITY.
2. ENCLOSURE AND EQUIPMENT SHALL BE GROUNDED IN ACCORDANCE WITH THE NATIONAL ELECTRIC CODE.

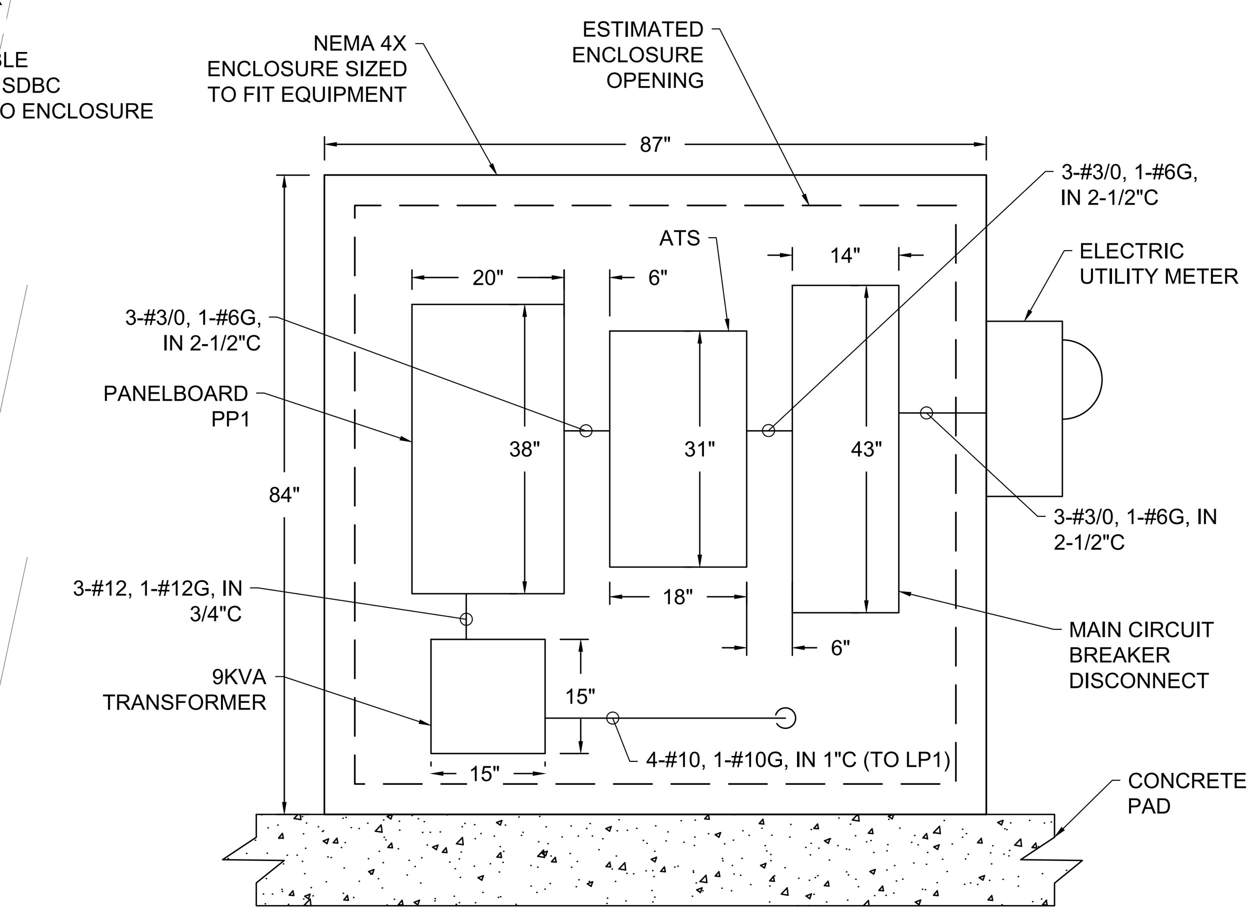

EQUIPMENT ENCLOSURE- EAST ELEVATION
NOT TO SCALE

NOTES:
1. CONDUITS NOT SHOWN FOR CLARITY.
2. ENCLOSURE AND EQUIPMENT SHALL BE GROUNDED AND BONDED IN ACCORDANCE WITH THE NATIONAL ELECTRIC CODE.
3. PROVIDE ENCLOSURE INTERIOR LIGHT WITH TWO LIMITS SWITCHES TO CONTROL LIGHT WHEN ENCLOSURE DOORS ARE CLOSE.
4. PROVIDE ENCLOSURE VENTILATION FAN WITH THERMOSTAT ON/OFF CONTROL.

SITE PLAN NOTES:

1. IT SHALL BE CLEARLY UNDERSTOOD THAT FAILURE TO MENTION SPECIFICALLY ANY WORK WHICH WOULD NORMALLY BE REQUIRED TO COMPLETE THE PROJECT SHALL NOT RELIEVE THE CONTRACTOR OF HIS/HER RESPONSIBILITIES TO COMPLETE THE WORK.
2. ALL EQUIPMENT WITHIN THE WETWELL SHALL BE RATED CLASS I, DIVISION 1 FOR HAZARDOUS LOCATIONS. INSTALLATION SHALL MEET THE REQUIREMENTS FOR THE INSTALLATION OF EQUIPMENT IN A HAZARDOUS (CLASSIFIED) LOCATION. INSTALL SEAL OFF FITTINGS FOR NEW CONDUITS IN ACCORDANCE WITH ARTICLE 501 OF THE NATIONAL ELECTRICAL CODE.
3. MOUNT SEVEN ELEMENT, 10 dB YAGI DIRECTIONAL ANTENNA TO LIGHT POLE. DIRECTION OF YAGI ANTENNA SHALL BE AIMED TOWARDS THE LANDINGS WWTP AND ADJUSTED TO MAXIMIZE THE SIGNAL STRENGTH. GROUND ANTENNA, ANTENNA MAST, AND ANTENNA CABLE. ROUTE ANTENNA CABLE TO RADIO.

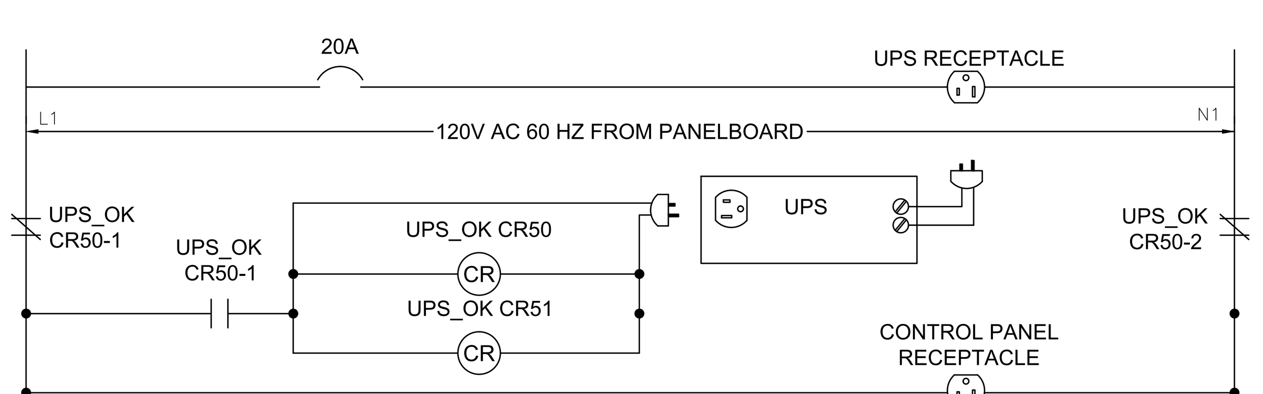

UPS (FAILOVER CIRCUIT) ELEMENTARY

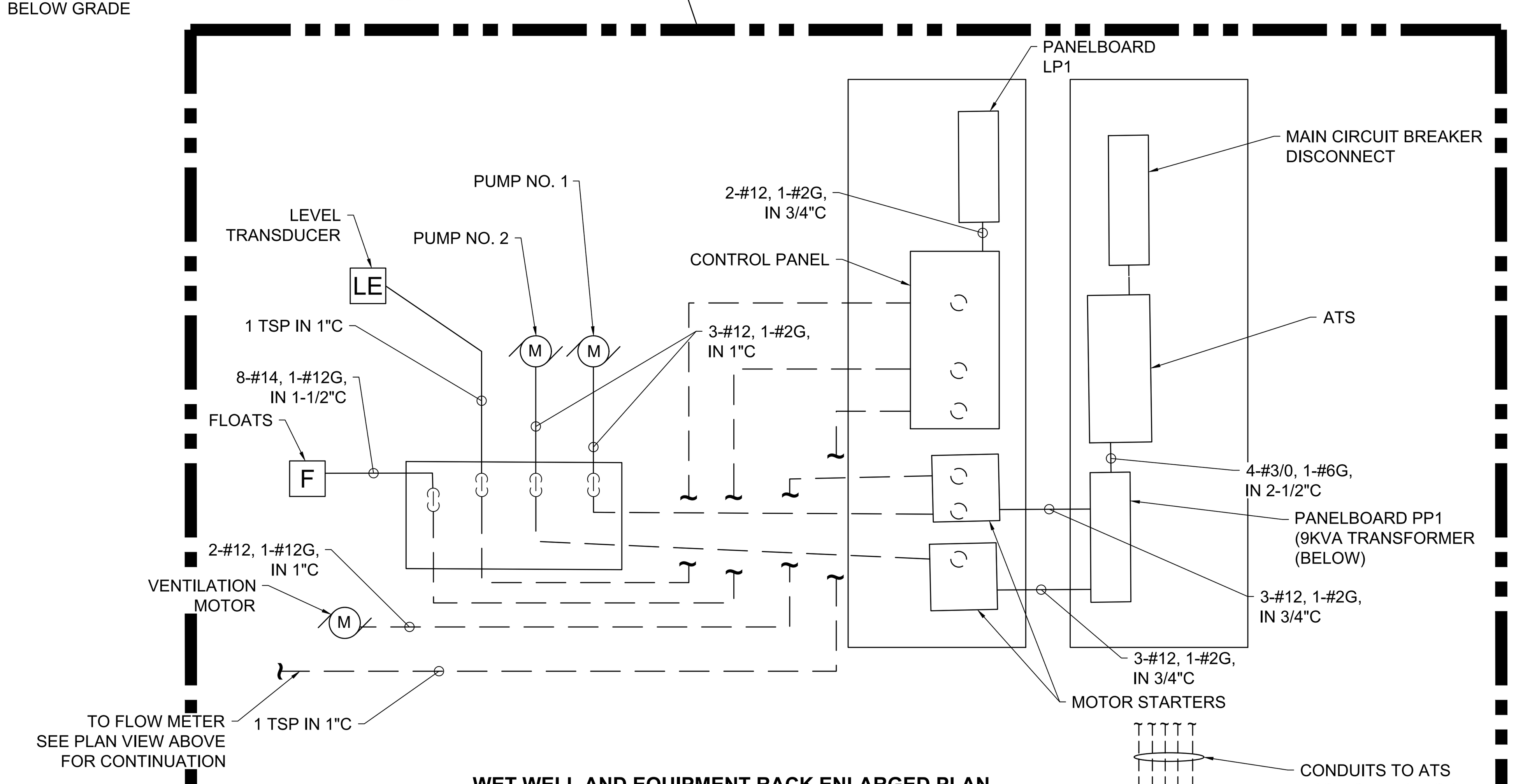

WET WELL AND EQUIPMENT RACK ENLARGED PLAN
NOT TO SCALE

REVISIONS			
NO.	DATE	BY	DESCRIPTION

DESIGN INFORMATION
DESIGNED BY: DY/NWH
DRAWN BY: NWH
CHECKED BY: AS/DOK
PROJECT MANAGER: SCL

PROFESSIONAL CERTIFICATION. I HEREBY CERTIFY THAT THESE DOCUMENTS WERE PREPARED OR APPROVED BY ME, AND THAT I AM A DULY LICENSED PROFESSIONAL ENGINEER UNDER THE LAWS OF THE STATE OF MARYLAND, LICENSE NO. 20812 EXPIRATION DATE: APRIL 24, 2025

SEAL

WORCESTER COUNTY DEPARTMENT OF PUBLIC WORKS
LEWIS ROAD GRAVITY SEWER SYSTEM AND PUMP STATION

WORCESTER COUNTY, MARYLAND

ELECTRICAL SITE PLAN AND NOTES

EA Engineering, Science, and Technology, Inc., PBC
11200 Racetrack Road, Unit A101
Ocean Pines, Maryland 21811
(410) 641-5341
www.eaest.com

GRAPHIC SCALE IN FEET

FULL SIZE PLOT: 24" x 36"

DATE: AUGUST 2023

PROJECT NUMBER: 6250909

E-102

SHEET: 20 OF 22

90% PLANS - NOT FOR CONSTRUCTION

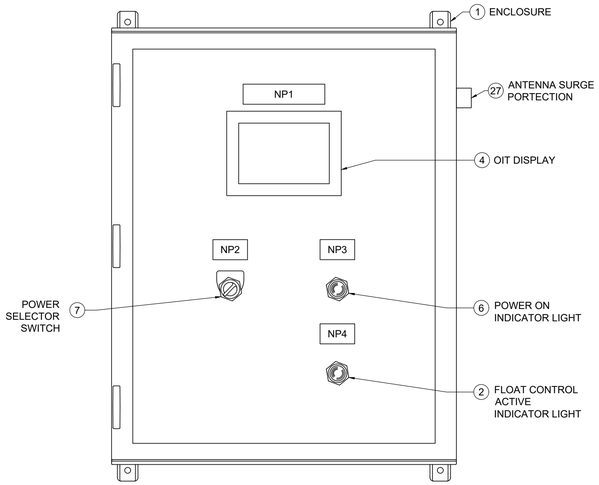

PUMP CONTROL PANEL - INNER-DOOR ELEVATION
NOT TO SCALE

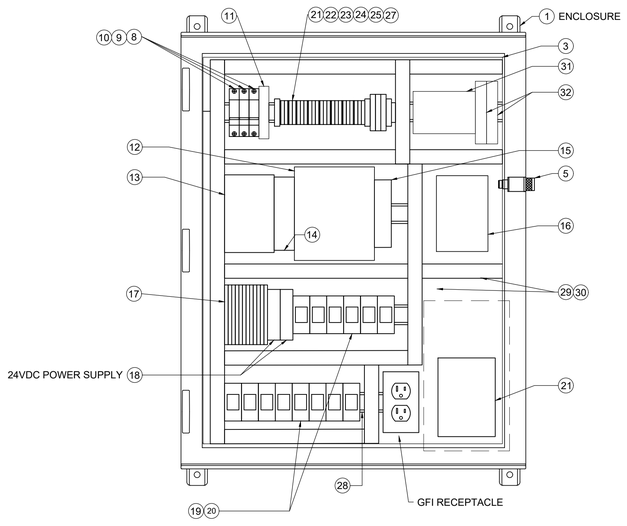

PUMP CONTROL PANEL - SUB-PANEL LAYOUT
NOT TO SCALE

PARTS LIST

ITEM #	QUANTITY	MANUFACTURER	PART NUMBER	DESCRIPTION
1	1	HOFFMAN	A30H2412SSLP	WALLMOUNT HINGED ENCLOSURE, 30X24X12
2	1	SQUARE D	9001KT1G31	PILOT LIGHT, GREEN, 30MM, 120 VAC, PUSH TO TEST
3	1	HOFFMAN	A30P24	BACKPLATE 27X21 (27.01X20.98)
4	1	KEP (KESSLER-ELLIS PRODUCTS)	MT8070iE	OIT GRAPHIC INTERFACE, COLOR LCD DISPLAY AND TOUCH SCREEN
5	1	POLYPHASER	IS-B50LN-C2	ANTENNA SURGE PROTECTION, 50 kA, 125-1000 MHz
6	1	SQUARE D	9001KT1R31	PILOT LIGHT, RED, 30MM, 120 VAC, PUSH TO TEST
7	1	SQUARE D	9001KS11BH2	SELECTOR SWITCH, 30MM, 2 POS MAINTAINED, WITH CONTACT BLOCKS
8	1	SQUARE D	M9F43115	CIRCUIT BREAKER, 1 POLE, 240 VAC, 15 A, TYPE K, UL489
9	1	SQUARE D	M9F22110	CIRCUIT BREAKER, 1 POLE, 480/277 VAC, 10 A, TYPE C, UL1077
10	1	SQUARE D	M9F43102	CIRCUIT BREAKER, 1 POLE, 240 VAC, 2 A, TYPE K, UL489
11	1	PHOENIX CONTACT	2907918	SURGE PROTECTION, TYPE 2 / TYPE 3, 120 VAC
12	1	SCHNEIDER ELECTRIC	TBUP474U	SCADA PACK 474, 32 BIT CONTROLLER 5 SERIAL PORTS (RS-232, RS-485), 2 ETHERNET PORTS, 1 USB DEVICE PORT, 1 USB HOST PORT, 12 ANALOG INPUTS, 2 ANALOG OUTPUTS, 20 DIGITAL INPUTS, 12 RELAY OUTPUTS
13	1	PHOENIX CONTACT	2320254	UNINTERRUPTIBLE POWER SUPPLY, QUINT-UPS/24DC/24 DC/5/1.3AH
14	1	PHOENIX CONTACT	2904600	POWER SUPPLY UNIT, 120 WATT, QUINT4-PS/1AC/24DC/5
15	1	PHOENIX CONTACT	2891152	ETHERNET SWITCH, 5 RJ45 PORTS
16	1	GE/MDS	MDS TRANSNET 900	TRANSNET 900 SPREAD SPECTRUM RADIO 902-928 MHz FREQUENCY HOPING
17	1	PHOENIX CONTACT	2906750	SURGE PROTECTION, 4-20MA
18	2	PHOENIX CONTACT	2904600	POWER SUPPLY, 24VDC, 5A, 120W, QUINT 4 PS/1AC/24VDC/5
19	13	IDEC	RH2B-ULC110-120V	RELAY
20	13	IDEC	SH2B-05	RELAY SOCKET
21	1	HOFFMAN	DAH1001A	ELECTRIC UNIT HEATER, 100W
22	AR	PHOENIX CONTACT	30 46 18 4	TERMINAL BLOCK, 6.2mm WIDE, 26-10AWG, GRAY, TYPE UT 4-MTD
23	AR	PHOENIX CONTACT	30 47 14 1	END BARRIER, COVER, 1.8mm WIDE, GRAY, TYPE UT 4-MTD
24	AR	PHOENIX CONTACT	30 46 20 7	GROUND TERMINAL BLOCK, 6.2mm WIDE, GREEN-YELLOW, 26-10 AWG, TYPE UT 4-MTD-PE
25	AR	PHOENIX CONTACT	80 00 88 6	END BRACKET, 9.5mm WIDE, GRAY, E/NS 35 N
26				
27	AR	PHOENIX CONTACT	30 46 10 0	TERMINAL FUSE BLOCK, 5X20, 6.2mm WIDE, 26-10AWG, BLOWN FUSE INDICATOR 110-250V, TYPE UT 4-HESI
28	AR	ALLEN-BRADLEY	199-DR1	DIN RAIL
29	AR	THOMAS AND BETTS	T2X2HDG	WIREDUCT, 1" X 2", GRAY
30	AR	THOMAS AND BETTS	T2CG	WIREDUCT COVER, 2", GRAY
31	1	IDEC	EB3CR06AN	INTRINSICALLY SAFE RELAY BARRIER, 110/220 VAC, SIX CHANNEL
32	2	DWYER INSTRUMENTS	KFD0-SCS-EX1.55	LOOP POWERED GALVANIC BARRIER

PUMP CONTROL PANEL NAME PLATE SCHEDULE

NP#	DESCRIPTION	NAMEPLATE NOMENCLATURE
NP1	NEMA 4X ENCLOSURE 30Hx24"Wx12"D MIN.	PUMP CONTROL PANEL
NP2	POWER ON SWITCH	POWER
NP3	STATUS LIGHT (GREEN)	POWER ON
NP4	FLOAT CONTROL STATUS	FLOAT CONTROL ACTIVE

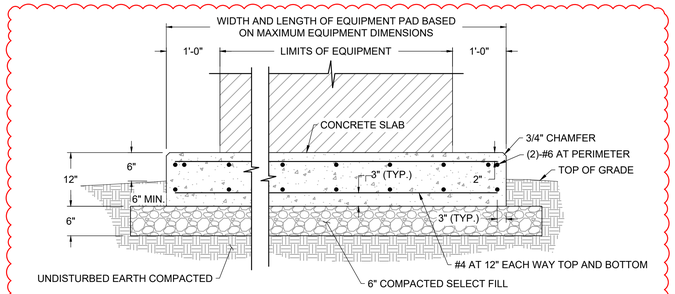

CONCRETE EQUIPMENT PAD DETAIL NOTES
1. COORDINATE ANCHOR BOLT LOCATIONS WITH MECHANICAL DRAWINGS AND EQUIPMENT MANUFACTURER.

CONCRETE EQUIPMENT PAD/GENERATOR PAD DETAIL
NOT TO SCALE

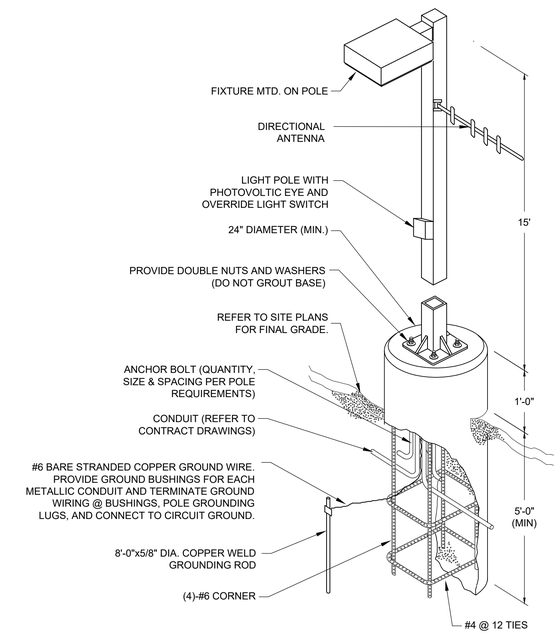

ANTENNA, LIGHT FIXTURE, AND POLE BASE DETAIL
NOT TO SCALE

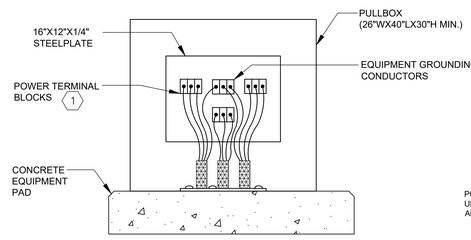

PULL BOX CONNECTION DETAIL
FRONT VIEW
NOT TO SCALE

1 NOTE:
PROVIDE SEPARATE TERMINAL MOUNTING PLATE AND TERMINALS FOR CONTROL CABLE TERMINATIONS.

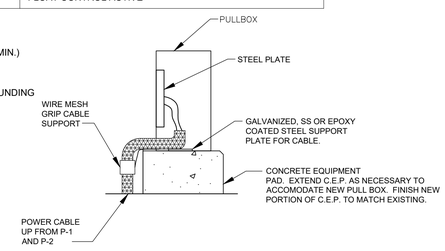

PULL BOX CONNECTION DETAIL
SIDE VIEW
NOT TO SCALE

GENERAL NOTE:

MANUFACTURERS AND EQUIPMENT MODEL NUMBERS IDENTIFIED WITH THE DRAWINGS AND/OR SPECIFICATIONS REPRESENT THE BASIS OF DESIGN. AS A PART OF THE SUBMITTAL PROCESS DETAILED IN THE SPECIFICATIONS, THE CONTRACTOR MAY SUBMIT IN WRITING TO THE OWNER AND ENGINEER REQUESTS FOR APPROVED EQUALS.

REVISIONS

NO.	DATE	BY	DESCRIPTION
1	2024/09/25	NWH	REVISED PER USDA COMMENTS

DESIGN INFORMATION

DESIGNED BY: DY/NWH
DRAWN BY: NWH
CHECKED BY: AS/DOK
PROJECT MANAGER: SCL

PROFESSIONAL CERTIFICATION. I HEREBY CERTIFY THAT THESE DOCUMENTS WERE PREPARED OR APPROVED BY ME, AND THAT I AM A DULY LICENSED PROFESSIONAL ENGINEER UNDER THE LAWS OF THE STATE OF MARYLAND, LICENSE NO. 20812 EXPIRATION DATE: APRIL 24, 2025

SEAL

STATE OF MARYLAND ★ DANIEL YUE ★ No. 20812 ★ PROFESSIONAL ENGINEER
April 24, 2024

WORCESTER COUNTY DEPARTMENT OF PUBLIC WORKS
LEWIS ROAD GRAVITY SEWER SYSTEM AND PUMP STATION

WORCESTER COUNTY, MARYLAND

CONTROL PANEL AND EQUIPMENT RACK

EA Engineering, Science, and Technology, Inc., PBC
11200 Racetrack Road, Unit A101
Ocean Pines, Maryland 21811
(410) 641-5341
www.eaest.com

FULL SIZE PLOT: 24" x 36"
DATE: AUGUST 2023
PROJECT NUMBER: 6250909

E-401
SHEET: 21 OF 22

90% PLANS - NOT FOR CONSTRUCTION

FILE PATH: \\OCEANPINES\PROJECTS\DOCS\WORCESTER COUNTY\6250909 - LEWIS ROAD SEWER CONNECTION\CAD\PRODUCTION\DESIGN SET\E-100 ELECTRICAL PLANS.DWG [E-401] LEMASTERS, STEVEN 10/24/2024 9:56 AM

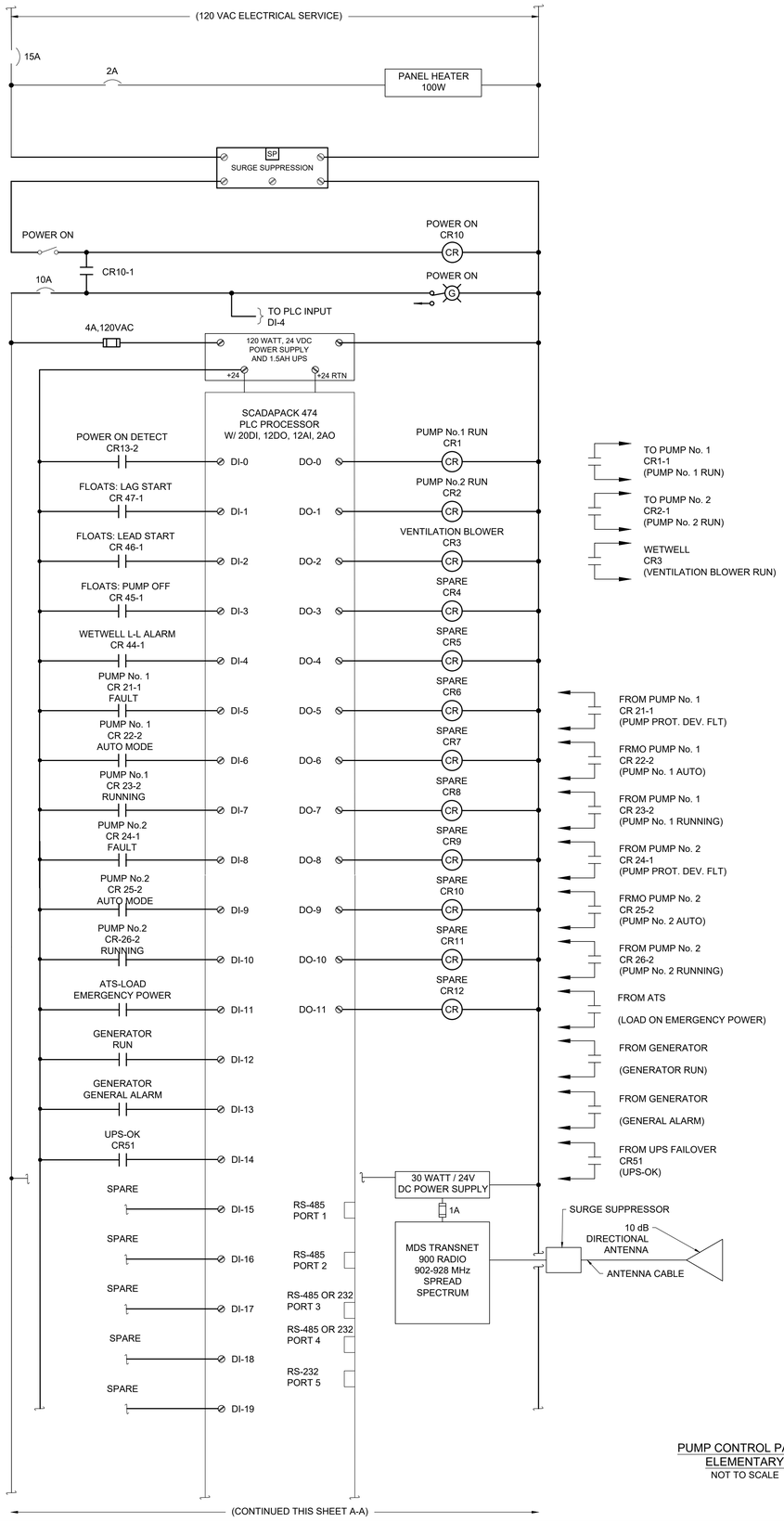

PUMP CONTROL PANEL
ELEMENTARY
NOT TO SCALE

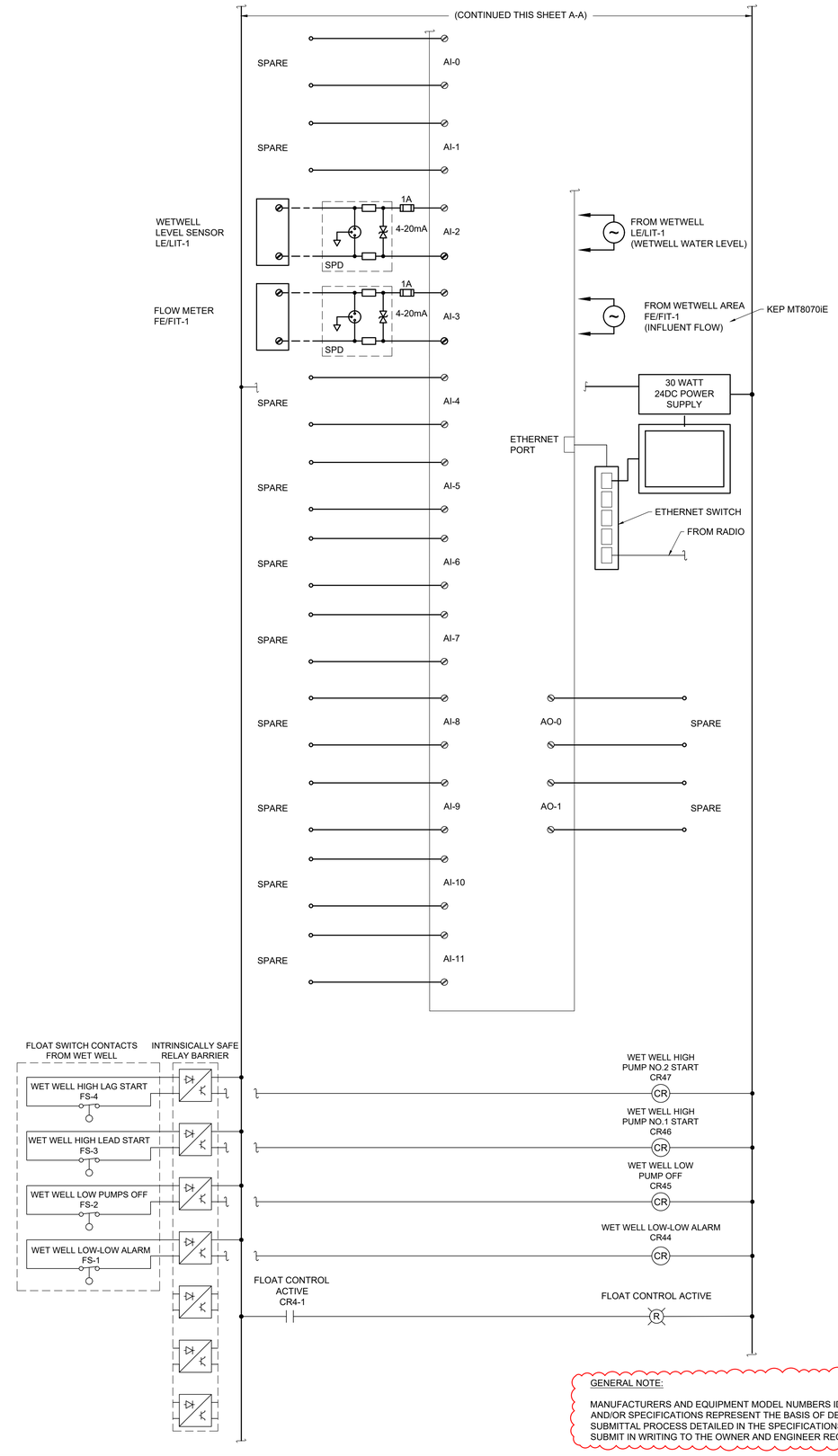

GENERAL NOTE:

MANUFACTURERS AND EQUIPMENT MODEL NUMBERS IDENTIFIED WITH THE DRAWINGS AND/OR SPECIFICATIONS REPRESENT THE BASIS OF DESIGN. AS A PART OF THE SUBMITTAL PROCESS DETAILED IN THE SPECIFICATIONS, THE CONTRACTOR MAY SUBMIT IN WRITING TO THE OWNER AND ENGINEER REQUESTS FOR APPROVED EQUALS.

REVISIONS

NO.	DATE	BY	DESCRIPTION
1	2024/09/25	NWH	REVISED PER USDA COMMENTS

DESIGN INFORMATION

DESIGNED BY: DY/NWH
DRAWN BY: NWH
CHECKED BY: AS/DOK
PROJECT MANAGER: SCL

PROFESSIONAL CERTIFICATION. I HEREBY CERTIFY THAT THESE DOCUMENTS WERE PREPARED OR APPROVED BY ME, AND THAT I AM A DULY LICENSED PROFESSIONAL ENGINEER UNDER THE LAWS OF THE STATE OF MARYLAND, LICENSE NO. 20812 EXPIRATION DATE: APRIL 24, 2025

SEAL

STATE OF MARYLAND ★ DANIEL YUE ★ No. 20812 ★ PROFESSIONAL ENGINEER

WORCESTER COUNTY DEPARTMENT OF PUBLIC WORKS
LEWIS ROAD GRAVITY SEWER SYSTEM AND PUMP STATION

WORCESTER COUNTY, MARYLAND

PUMP CONTROL PANEL ELEMENTARY

EA Engineering, Science, and Technology, Inc., PBC
11200 Racetrack Road, Unit A101
Ocean Pines, Maryland 21811
(410) 641-5341
www.eaest.com

FULL SIZE PLOT: 24" x 36"
DATE: AUGUST 2023
PROJECT NUMBER: 6250909

E-501

SHEET: 22 OF 22

90% PLANS - NOT FOR CONSTRUCTION

FILE PATH: \\DCEAINFINE\PROJECTS\DOCS\WORCESTER COUNTY\6250909 - LEWIS ROAD SEWER CONNECTION\CAD\PRODUCTION\DESIGN SITE-100\ELECTRICAL PLANS.DWG [E-501] LEMASTERS, STEVEN 10/24/2024 9:56 AM