DEPARTMENT OF
ENVIRONMENTAL PROGRAMS

Worcester County

GOVERNMENT CENTER
ONE WEST MARKET STREET, ROOM 1306
SNOW HILL, MARYLAND 21863
TEL:410.632.1220 / FAX: 410.632.2012

LAND PRESERVATION PROGRAM
STORMWATER MANAGEMENT
SEDIMENT AND EROSION CONTROL
SHORELINE CONSTRUCTION
AGRICULTURAL PRESERVATION
ADVISORY BOARD

WELL & SEPTIC
WATER & SEWER PLANNING
PLUMBING & GAS
CRITICAL AREAS/FORESTRY
COMMUNITY HYGIENE

July 11, 2023

This notification is to advise you that the Department has received and is presently reviewing the following request for a shoreline construction project:

Tony Nguyen – Request No. 2023-069 – Request to replace 100' of vinyl bulkhead and one boat lift with associated piling. Close off existing boat ramp. Maximum channelward extension of 18.5'. This project is located at 10536 Sussex Rd, Ocean City, also known as Tax Map 21, Parcel 178, Lot D. Tenth Tax District of Worcester County, Maryland.

The Department in considering this application will make specific findings of fact with regard to the environmental impact, navigational impact, recreational potential, commercial benefit to Worcester County, impact of the proposed construction upon the surrounding neighborhood and upon property values therein, and any other pertinent issues. Approval from the Department does not guarantee approval from any other applicable regulatory agencies.

If you have an interest which may be adversely affected by the issuance of this permit, you are requested to notify this Department in writing within fifteen (15) calendar days which will end on July 26, *2023*.

Sincerely,

Brandy Whitlock
Environmental Inspector

cc: Interested Parties
David Bradford, Deputy Director
File

WORCESTER COUNTY
SHORELINE CONSTRUCTION
APPLICATION

Request No.: 2023-069
Submission Date: 7-11-23

✓ Major Construction ($300.00) _____ Minor Construction ($150.00)

Written Description of Proposed Improvement (include channelward distance):
100 ft of vinyl replacement bulkhead closing off existing boatramp one boatlift with associated piling. 18.5 Channel ward

Property Description:
Map: 0021 Parcel: 0178 Lot: D Section: 1 Block: — Tax District: —
Street Address: 10536 Sussex Rd. W. Ocean City, Md. 21842
Subdivision: 7163
Dwelling on lot: ✓ Dwelling under construction: _____ Vacant: _____ Commercial: _____

Owner: Tony Nguyen Phone No. 410-726-8571
Mailing Address: 10536 Sussex Rd W. Ocean City, Md 21842
E-Mail Address: duyngugen40@gmx.com

Contractor: Just-Rite Marine Inc. Phone No.: 410-641-9961
Mailing Address: 9316 Carey Rd Berlin, Md 21811
E-Mail Address: Mike@justritemarine.com

Recorded Adjacent Property Owner: William L. Savage
Property Address: 10542 Sussex Rd W. Ocean City Md 21842
Tax Map: 0021 Parcel: 0243 Lot: E Section: D Block: —

Recorded Adjacent Property Owner: Gail L. Ashley c/o Gail Fowler
Property Address: 10530 Sussex Rd. W. Ocean City, Md 21842
Tax Map: 0021 Parcel: 0267 Lot: C Section: D Block: —

As the applicant, I attest that the information presented on this application, site plan and any written documentation attached hereto is known to be accurate. I understand that the proposed shoreline improvement will be constructed to meet or exceed minimum design standards adopted by the Department. Any deviation from these standards will require construction plans sealed by an engineer registered in the State of Maryland. I acknowledge that any falsification of information presented may result in revocation of this approval and of the subsequent Shoreline Construction Permit.

Tony Nguyen 7/2/23
Owner/Applicant's Signature Date

****

DEPT. USE ONLY:
Notification Distribution Date: 7-11-23 *Public Comment Deadline:* 7-26-23 *(15 calendar days)*
Department Approval Date: _____ *Expiration:* _____

Revised 7/1/19

R. Mike Stouffer C/O Tony Ngu
9316 Carey Rd.
Berlin Md.
mike@justritemarine.com
410-641-9961

Worcester Department of Enviror
One West Market Street Suite 13(
Snow Hill, Md. 21863

Dear Worcester Department of Enviror

I am submitting an application to the Maryland Department of the Environment to obtain authorization to perform work in tidal wetlands at my property located at:

10536 Sussex Rd. W. Ocean City, Md. 21842

I propose to perform the following work:

100'ft of vinyl replacement bulkhead, one boatlift with associated piling.

Please review the attached plan and call me if you have any questions. If you would like to provide comments to the Maryland Department of the Environment, please send a letter to them at the following address within 14 days of receipt of this letter. Include the proposed project address in the comment letter.

Maryland Department of the Environment
Tidal Wetlands Division
1800 Washington Blvd.
Baltimore, MD 21230
(410) 537-3837

Sincerely,

R. Mike Stouffer C/O Tony Ngu

Contractor
Just-Rite Marine Inc.
9316 Carey Rd.
Berlin, Md. 21811
MD Marine Lic. 083(E)
MHIC# 71561
Ocean City# 30542
410-641-9961

Proposed Improvements
100'ft of vinyl replacement bulkhead
One Boatlift with associated piling (4)
Boat ramp to be removed
Channel ward distance 18.5'ft max

Existing Detail Drawing

Scale 1" 40'ft
No SAV's Present
Soundings at Bulkhead
MLW 2.8'ft
MHW 4.30'ft
5'ft out 3.5'ft
10'ft out 3.8 ft
15'ft out 4.2 ft
20'ft out 4.8 ft

MARSH

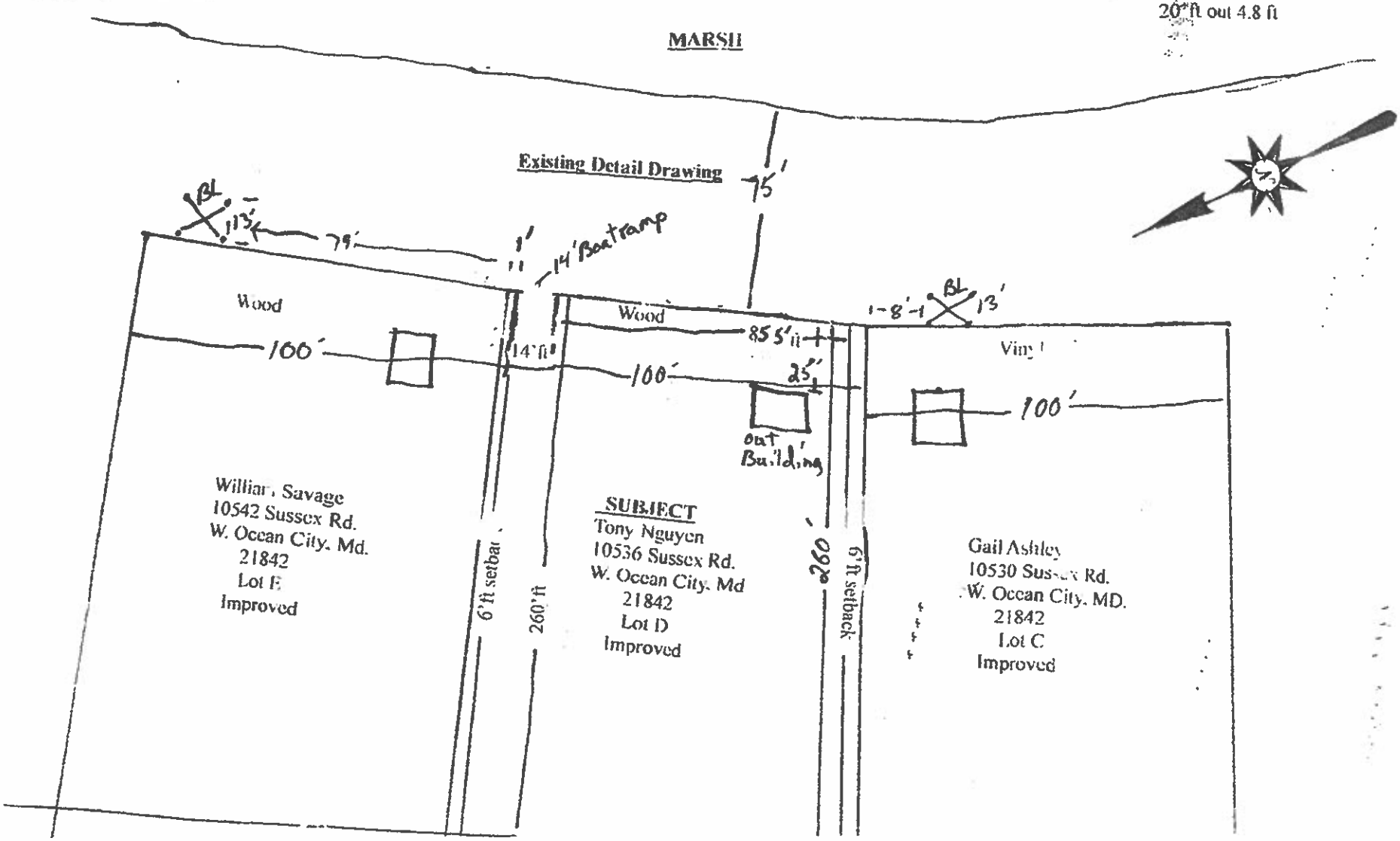

Contractor
Just-Rite Marine Inc.
9316 Carey Rd.
Berlin, Md. 21811
MD Marine Lic. 083(E)
MHIC# 71561
Ocean City# 30542
410-641-9961
mike@justritemarine.com

Proposed Detail Drawing

Scale 1" = 40' ft
No SAV's Present
Soundings at Bulkhead
MLW 2.8' ft
MHW 4.30' ft
5' ft out 3.5' ft
10' ft out 3.8 ft
15' ft out 4.2 ft
20' ft out 4.8 ft

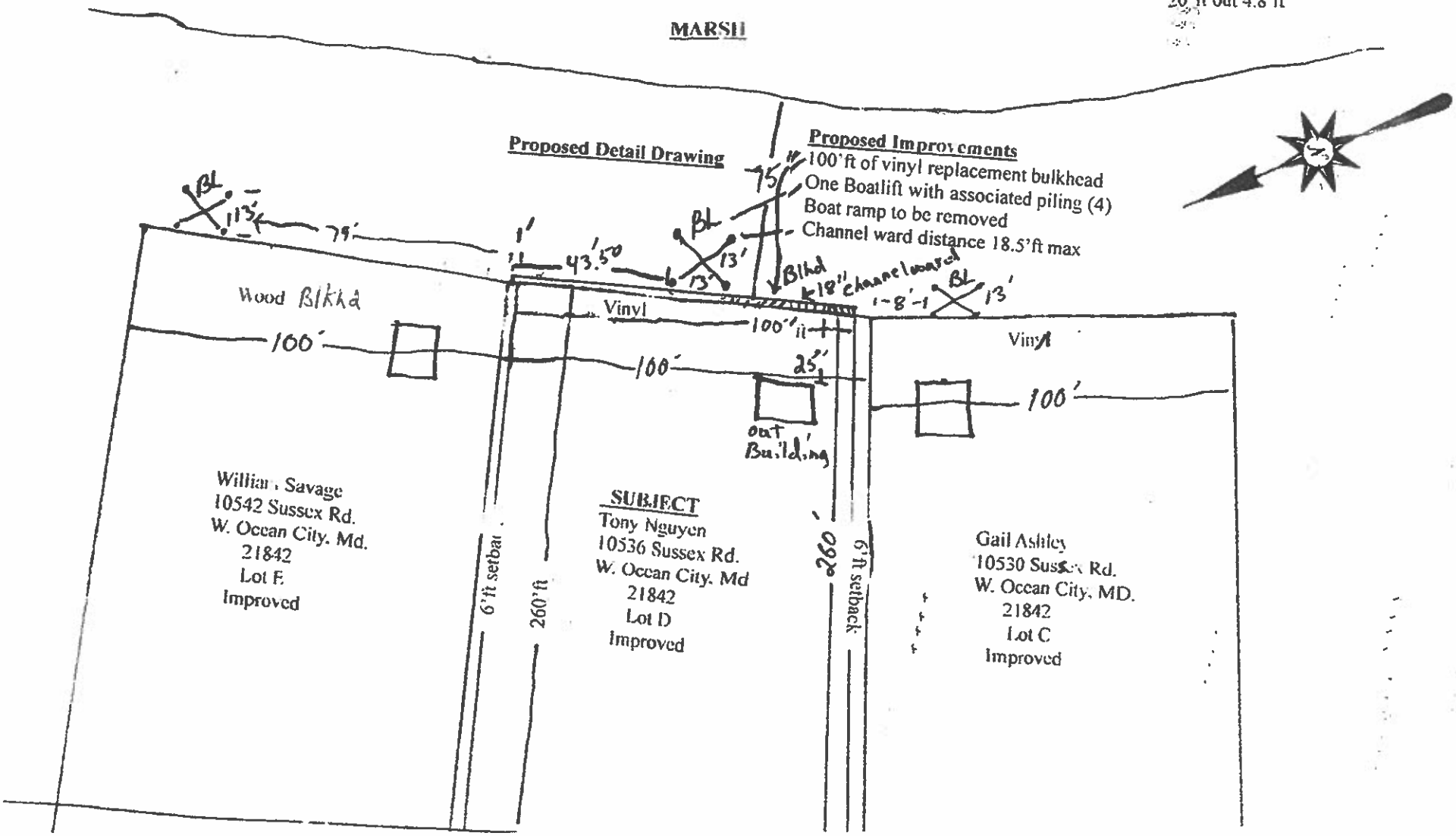

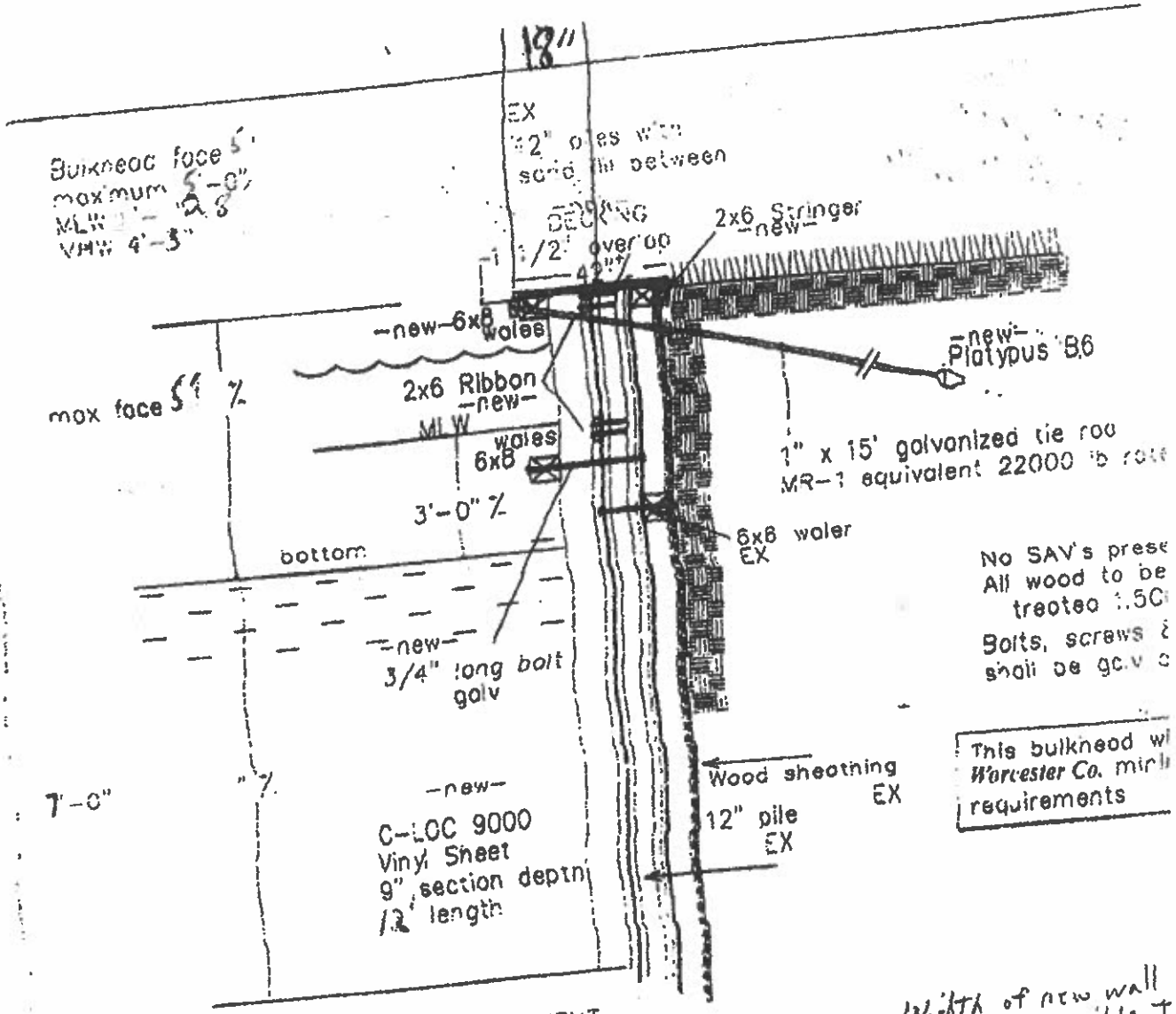

BULKHEAD REPLACEMENT SECTION

Builder:
Just-Rite Marine Structures
9316 Carey Rd
Berlin, MD 21811
410-641-9961

Owner:

SUBJECT
Tony Nguyen
10536 Sussex Rd.
W. Ocean City, Md
21842
Lot D
Improved

GOLDEN ENGINEERED 4 POST, 2 MOTOR SEA DRIVE BOAT LIFTS

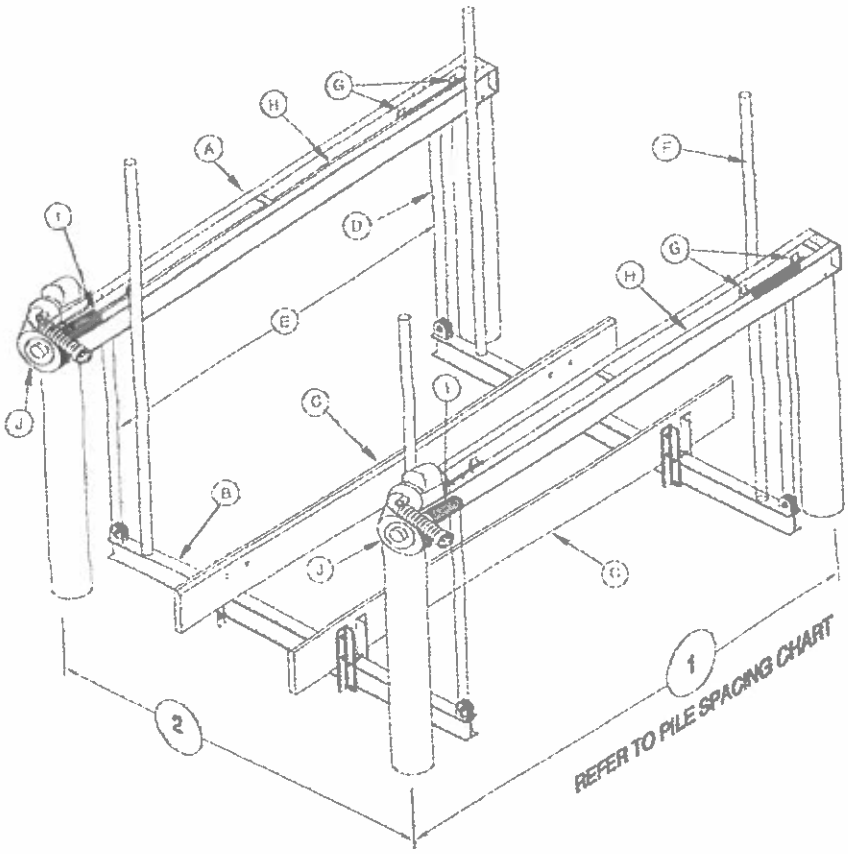

PILE SPACING CHART
The boat center of gravity needs to be set in the center of the top beam

Lift Capacity	1' Dimension	2' Dimension	Recommended Pile Diameters
Lb.	Ft.	Ft.	In.
5,000	11	10	8
7,500	12	12	10
10,000		12.5	
14,000		14	
16,000			
20,000	14	16	
24,000	16		12
28,000			

STAINLESS STEEL PILING MOUNT BRACKET- RECOMMENDED ATTACHMENT BASED ON BRACKET CONFIGURATION. VERIFY ADEQUACY BASED ON ACTUAL SITE CONDITIONS:
4-3/8" STAINLESS STEEL LAG SCREWS USED TO CONNECT THE BRACKETS TO THE PILING AND
2-3/8" STAINLESS STEEL CARRIAGE BOLTS USED TO CONNECT THE BRACKETS TO THE LIFT CHANNELS

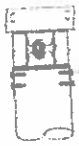

NOTE: THIS STRUCTURE HAS BEEN DESIGNED FOR LOADS ASSOCIATED WITH AN ULTIMATE WIND SPEED OF 180 MPH, EXPOSURE D, RISK CATEGORY I, CALCULATED PER FLORIDA BUILDING CODE 6th EDITION, 2017, ASCE SEI 7-10 AND ADM-2015. BOATS SHALL NOT BE STORED ON LIFTS DURING HIGH WIND EVENTS.

IN GENERAL, PILING PENETRATION TO BE A MINIMUM OF 16' INTO THE SAND BOTTOM OR 6' INTO THE ROCK STRATA. SUB-SURFACE CONDITIONS CAN VARY GREATLY. THE CONTRACTOR SHALL VERIFY ALL PILE CAPACITIES. ALL PILINGS TO BE 2.5 C.C.A. PRESSURE TREATED WOOD. ALL STRUCTURAL MEMBERS TO BE 6061-T6 ALUMINUM.

SUMMARY OF DESIGN FEATURES

LIFT CAPACITY	(A) TOP BEAM CHANNEL 2 EACH	(B) CRADLE I-BEAM 2 EACH	(C) BUNK BOARDS (PT)	(D) CABLE SIZE	(E) CABLE SPREAD	(F) GUIDE POST HGTH	(G) BRGS	(H) DRIVE SHAFT	(I) WINDER DIA	(J) MOTOR HP VOLTAGE	INCHES OF LIFT PER MIN	RECOM. PILING SIZES
Lbs	INCHES	INCHES		INCHES	IN							
5,000#	4 H x .15 2 W x .23 140' OAL	6 H x .19 4 W x .29 120' LGTH	2x2x1-1/2 ROUGH SAWN CARPETED	4 - 5/16" x 15' ST ST 1 PART	107.75	80"	10 - 2" H.D. EXTRUDED 6061-T6 ALUM.	1-15/16" DIA SCH 40 GALV PIPE	3-1/2" DIA SCH 80 ALUM PIPE W/ CABLE GROOVES	2 - 3/4 HP 120V-20A 240V-10A	39.76	8" DIA
7,500#	5 H x .15 2.25 W x .26 x 153' OAL	6 H x .19 4 W x .29 144' LGTH			126.75					2 - 1 HP 120V-28A 240V-14A		
10,000#	6 H x .17 2.5 W x .28 x 153' OAL	8 H x .23 5 W x .35 150' LGTH		4 - 5/16" x 30' ST ST 2 PART	116.75					2 - 3/4 HP 120V-20A 240V-10A	19.85	10" DIA
14,000#	7 H x .17 2.75 W x .28 x 153' OAL	8 H x .25 5 W x .41 150' LGTH										
16,000#	8 H x .19 3 W x .35 x 153' OAL	10 H x .25 6 W x .41 168' LGTH	3x10x1-1/2 ROUGH SAWN CARPETED			120"		1-15/16" DIA SCH 80 GALV PIPE		2 - 1 HP 120V-28A 240V-14A		
20,000#	8 H x .25 3.75 W x .41 x 177' OAL	10 H x .25 6 W x .41 192' LGTH		4 - 5/16" x 45' ST ST 3 PART	127.75						13.20	
24,000#	8 H x .25 3.75 W x .41 x 201' OAL	10 H x .29 6 W x .50 192' LGTH			151.75							
28,000#	10 H x .526 2.88 W x .437 x 201' OAL	12 H x .31 7 W x .62 192' LGTH		4 - 5/16" x 60' ST ST 4 PART	145					2 - 1-1/2 HP 120V-30A 240V-15A	8.57	12" DIA

Tony Nguyen
10536 Sussex Rd
W. Ocean City, Md 21842

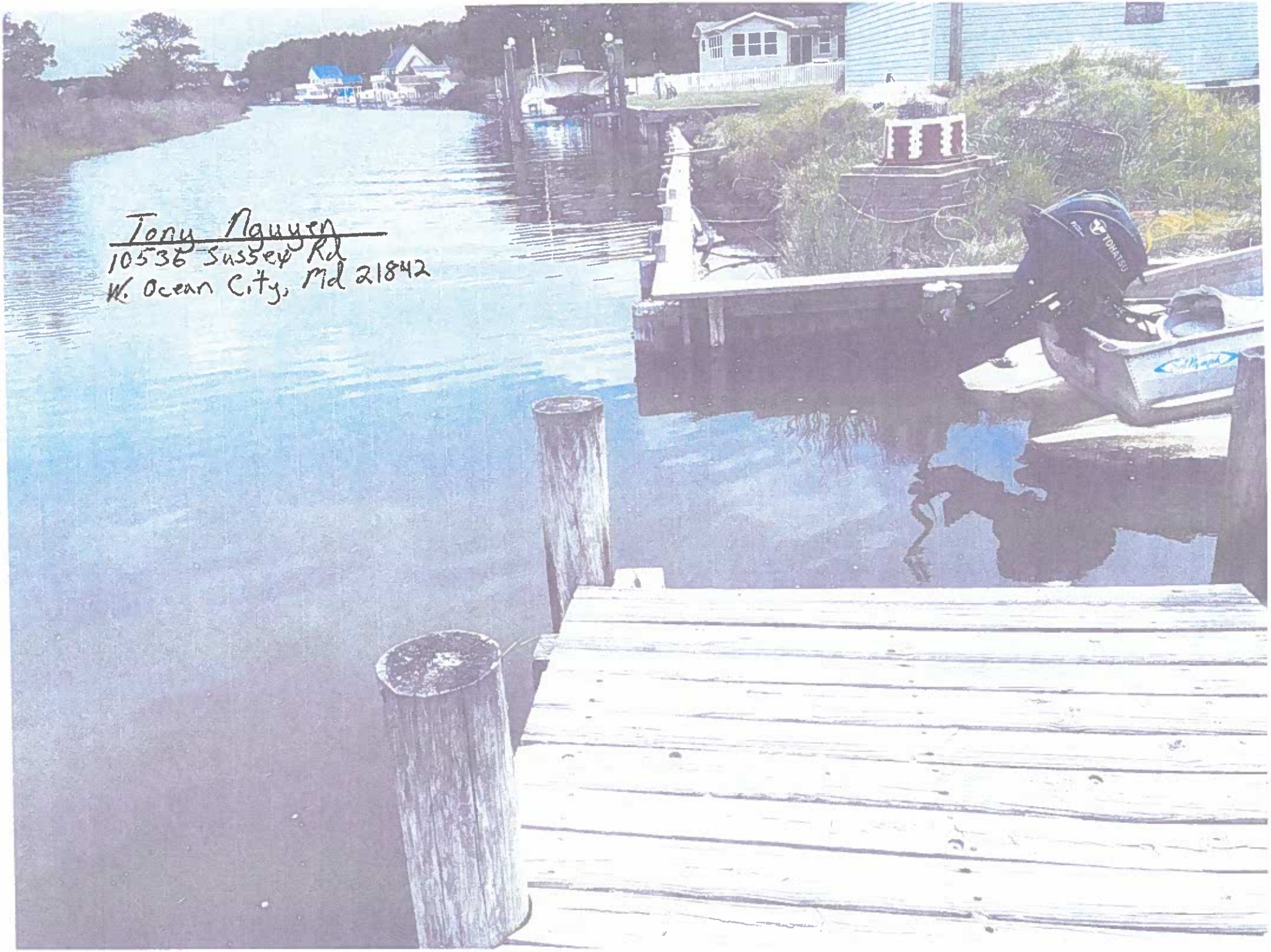

Tony Nguyen
10536 Sussex Rd
W. Ocean City, Md 21842